P-12625-1

E0109

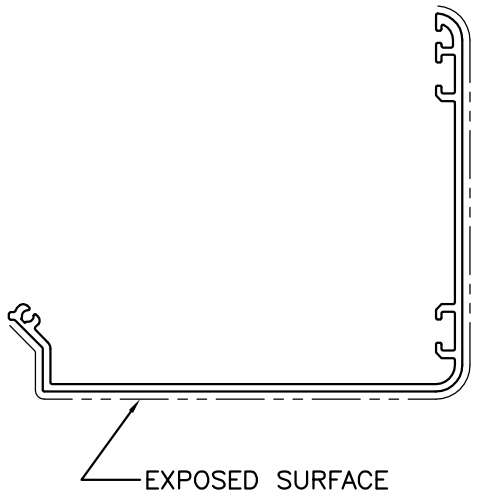

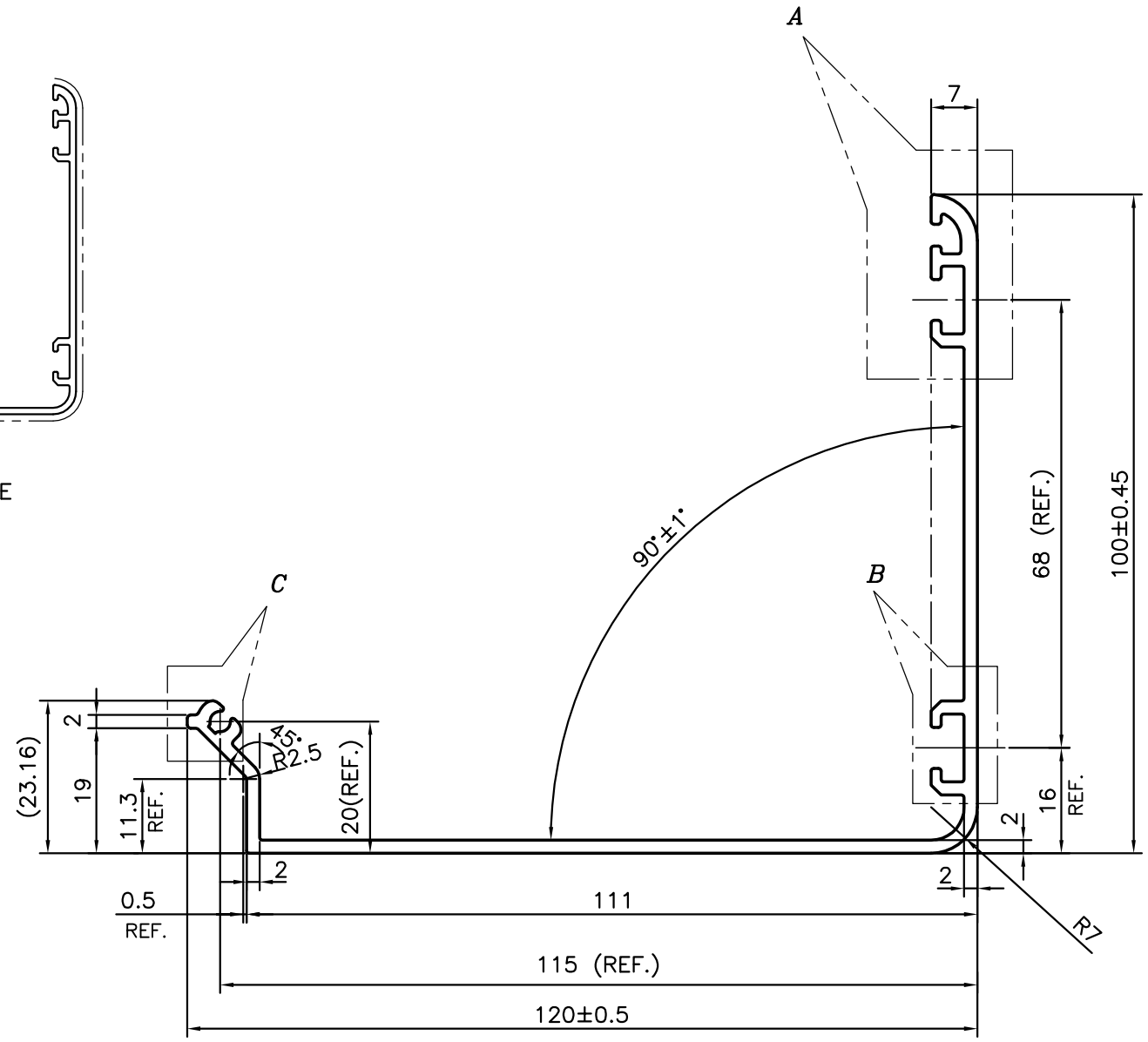

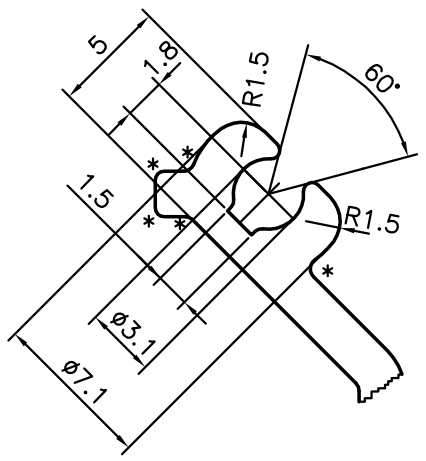

DETAIL OF "C"
SCALE 3:1

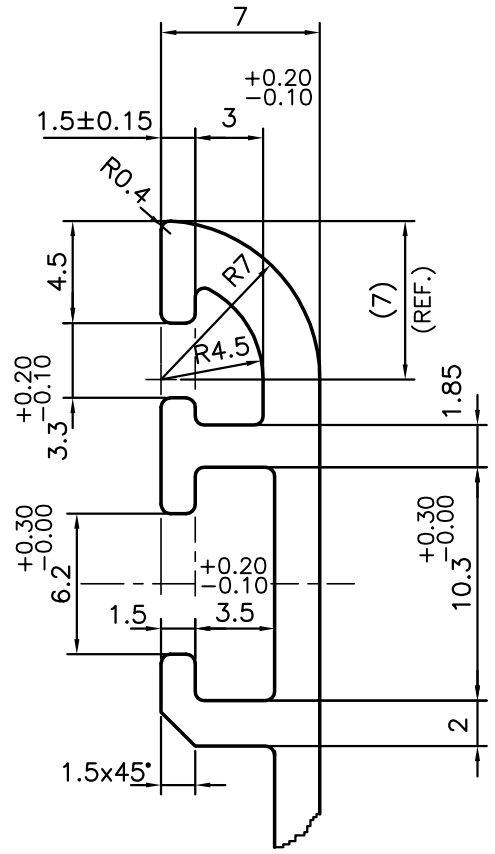

DETAIL OF "A"
SCALE 3:1

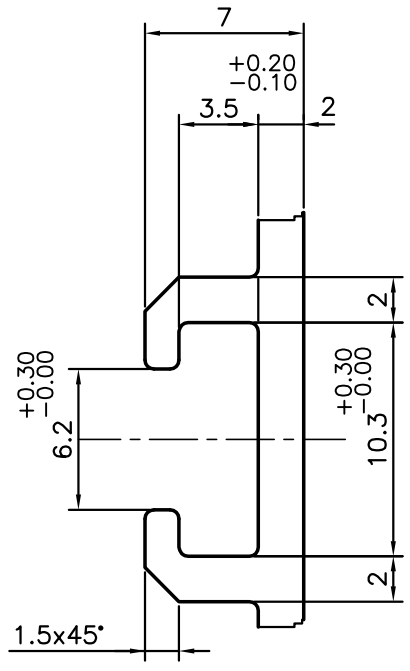

DETAIL OF "B"
SCALE 3:1

* = 0.5 RADIUS (5 PLACES)

JINDAL SYMBOL OF QUALITY AN ISO 9001 COMPANY	*JINDAL ALUMINIUM LTD.* *BANGALORE-560073 (INDIA)*		NAME	DATE
		DRAWN	*J.P.KAUSHIK*	07-05-2013
		CHECKED		
		APPROVED	S.S.GARG	21-05-2013
1. ALL DIMENSIONS ARE IN mm. 2. ROUND OFF ALL SHARP CORNERS WITH 0.50 mm. 3. TOLERANCES WILL BE AS PER BS:EN-755-9, UNLESS OTHERWISE SPECIFIED		SCALE		1:1
		AREA mm^2		533.381
		PERIMETER mm.		534.463
		WEIGHT kg/m		1.440
PARTY'S NAME	DORMA INDIA PVT. LTD., CHENNAI	DRAWING No.		SECTION No.
PARTY'S DRAWING No.	255061-00-1-20 & AS PER AutocAD DRG.	P-12625-1		–
ALLOY & TEMPER	HE9 WP	E0109		E0109
DESCRIPTION	STRUCTURAL MISC. SECTION			