P–11231	
S3124	
E0112	

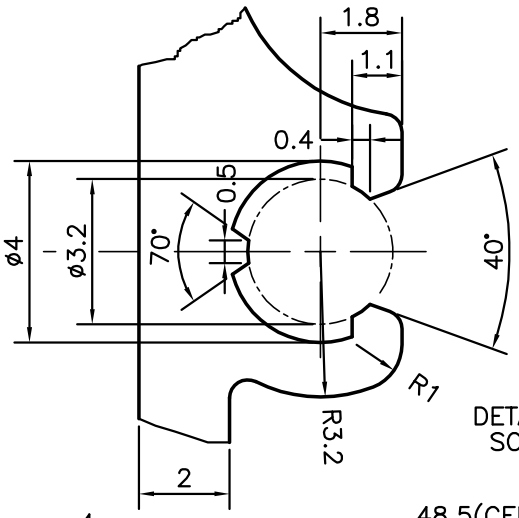

DETAIL OF "A"
SCALE 6:1

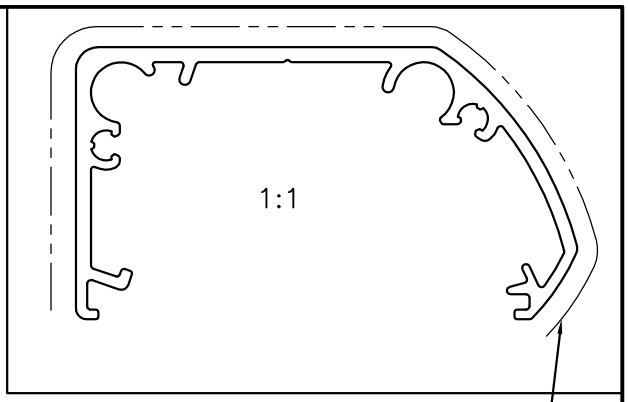

EXPOSED SURFACE

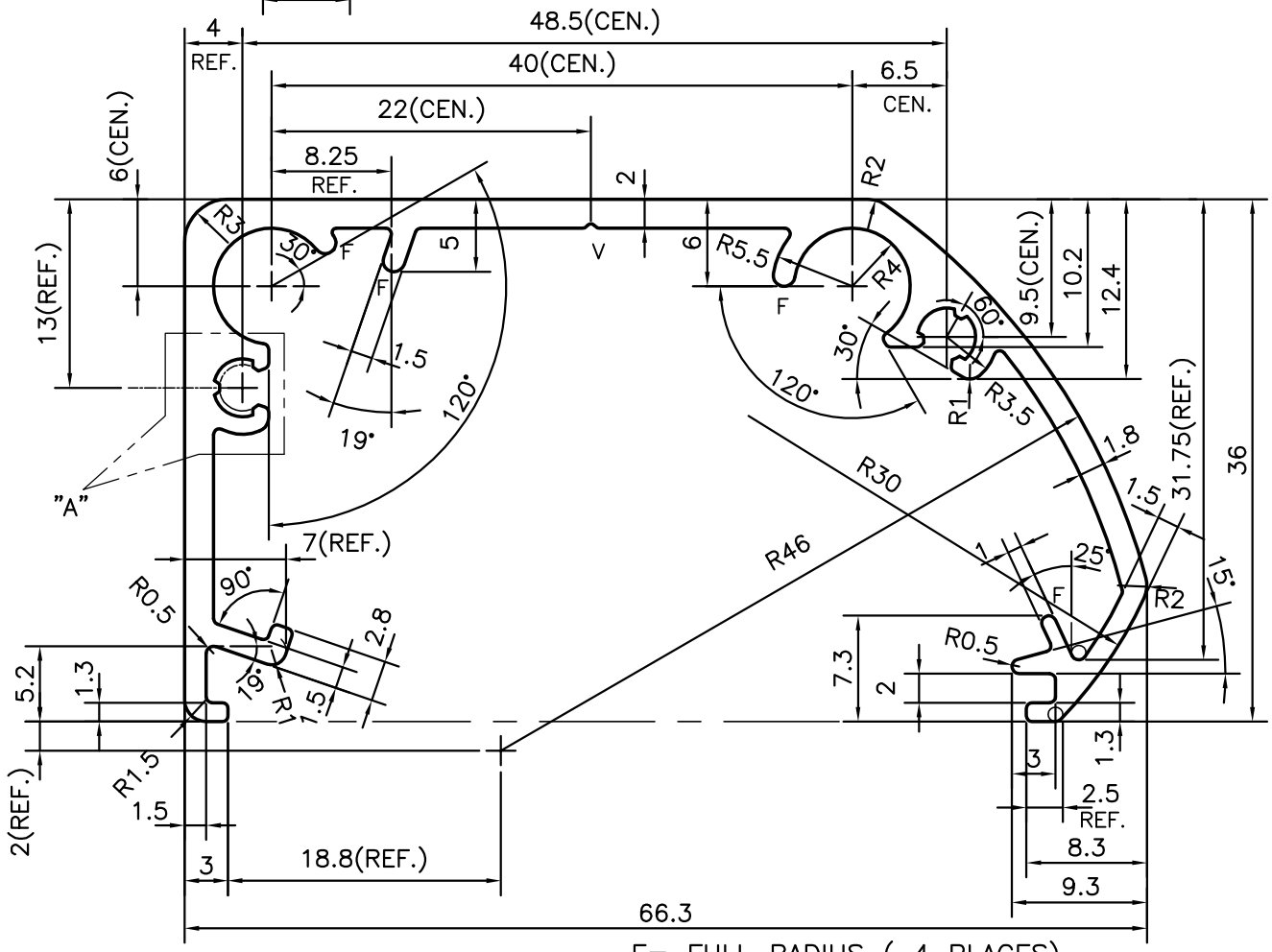

F= FULL RADIUS (4 PLACES)
V = V GROOVE 0.3x90°

JINDAL
SYMBOL OF QUALITY
AN ISO 9001 COMPANY

JINDAL ALUMINIUM LTD.

BANGALORE–560073 (INDIA)

	NAME	DATE
DRAWN	J.P.KAUSHIK	24–09–2011
CHECKED		
APPROVED	S.S.GARG	12–12–2011

1. ALL DIMENSIONS ARE IN mm.
2. ROUND OFF ALL SHARP CORNERS WITH 0.40 mm.
3. TOLERANCES WILL BE AS PER,BS:EN–755–9 UNLESS OTHERWISE SPECIFIED

SCALE	2:1
AREA mm^2	308.054
PERIMETER mm.	320.046
WEIGHT kg/m	0.832

PARTY'S NAME	WILLIAMS REFREGERATION, BANGALORE
PARTY'S DRAWING No.	OR–LCP
ALLOY & TEMPER	HE9 WP
DESCRIPTION	MISC. SECTION

DRAWING No.	SECTION No.
P–11231	–
S3124	S3124
E0112	E0112