P-13195-1
E0124

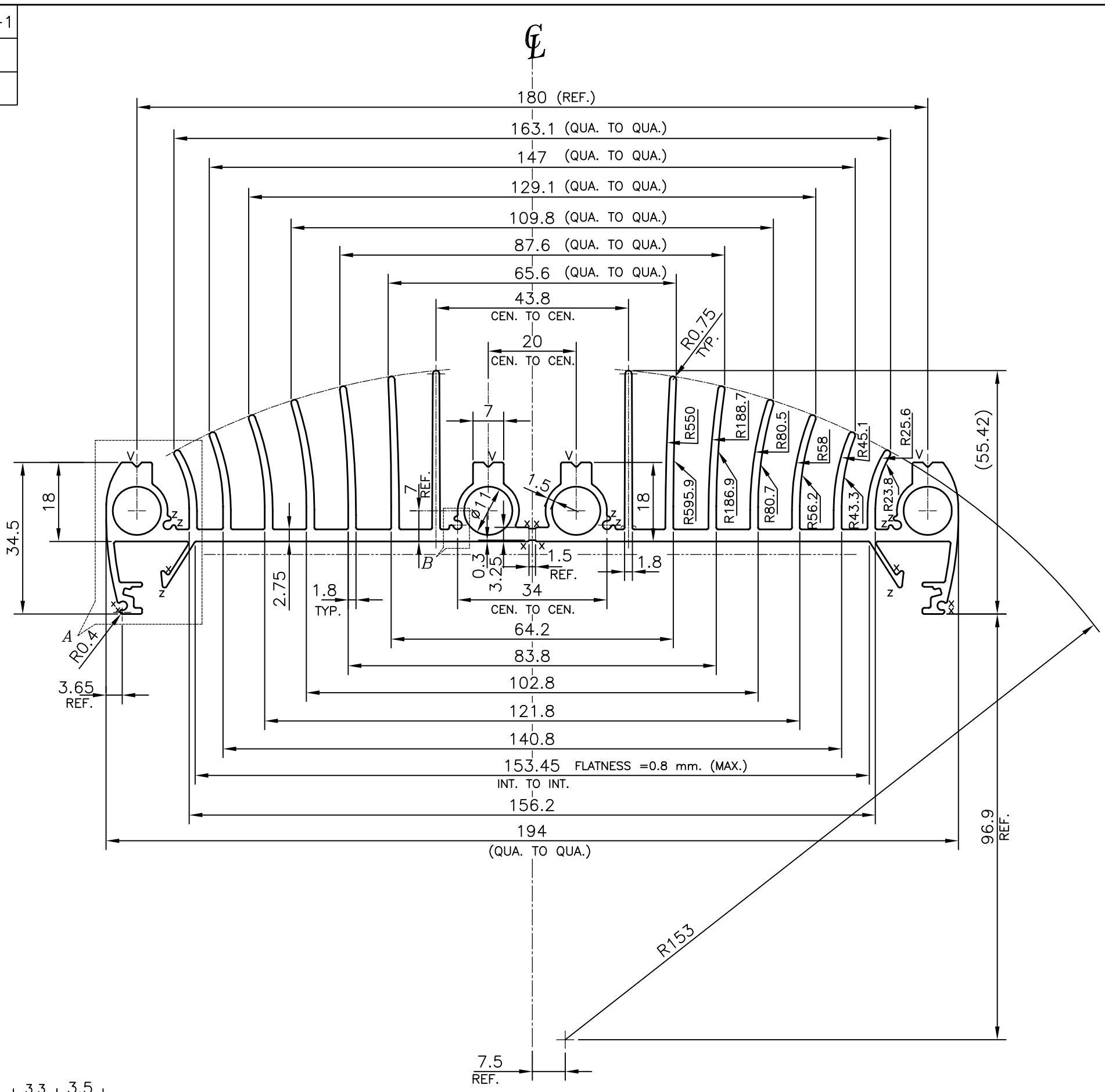

DETAIL OF "B"
SCALE 3:1

X = RADIUS 0.3 mm. (10 PLACES)
Z = RADIUS 0.5 mm. (10 PLACES)
a = RADIUS 0.5 mm. (10 PLACES)
V = VEE GROOVE 1x90° (4 PLACES)
—·—·— = EXPOSED SURFACE

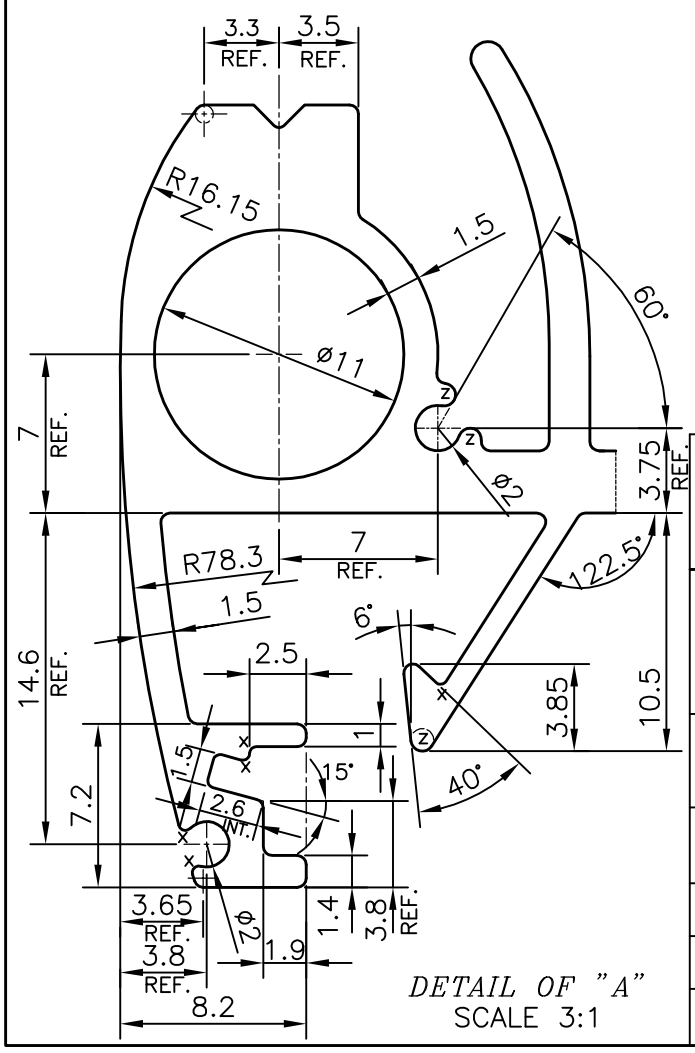

DETAIL OF "A"
SCALE 3:1

UPTO 6.40mm – ±0.20	UPTO 32.0mm – ±0.38	UPTO 120.0mm – ±0.85	1. STRAIGHTNESS=1.7mm/M
UPTO 10.0mm – ±0.23	UPTO 50.0mm – ±0.46	UPTO 160.0mm – ±1.02	2. TWIST=1.7mm/M
UPTO 12.0mm – ±0.25	UPTO 60.0mm – ±0.53	UPTO 200.0mm – ±1.14	3. ANGULARITY= ±2°
UPTO 16.0mm – ±0.28	UPTO 80.0mm – ±0.69	UPTO 250.0mm – ±1.40	
UPTO 25.0mm – ±0.30	UPTO 100.0mm – ±0.75	UPTO 300.0mm – ±1.65	

JINDAL
SYMBOL OF QUALITY
AN ISO 9001 COMPANY

JINDAL ALUMINIUM LTD.
BANGALORE-560073 (INDIA)

1. ALL DIMENSIONS ARE IN mm.
2. ROUND OFF ALL SHARP CORNERS WITH 0.40 mm.
3. TOLERANCES WILL BE AS PER IS:6477-1983 , UNLESS OTHERWISE SPECIFIED

		NAME	DATE
	DRAWN	PARVESH	26-11-2013
	CHECKED		
	APPROVED	S.S.GARG	29-11-2013
	SCALE		1:1
	AREA mm^2		1617.466
	PERIMETER mm.		1454.842
	WEIGHT kg/m		4.367

PARTY'S NAME	SUVEG ELECTRONICS, AHMEDABAD
PARTY'S DRAWING No.	AS PER AUTOCAD DRAWING & PROPOSAL
ALLOY & TEMPER	6063 T6
DESCRIPTION	HEAT SINK SECTION

DRAWING No.	SECTION No.
P-13195-1	–
E0124	E0124