P–13523	
E0152	

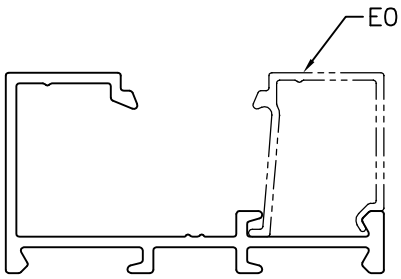

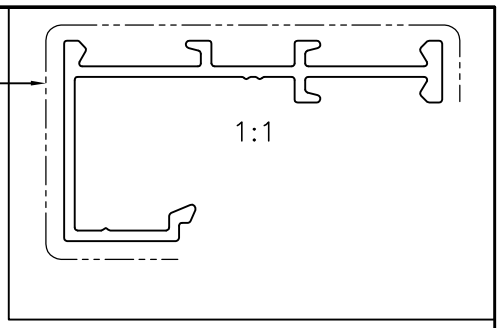

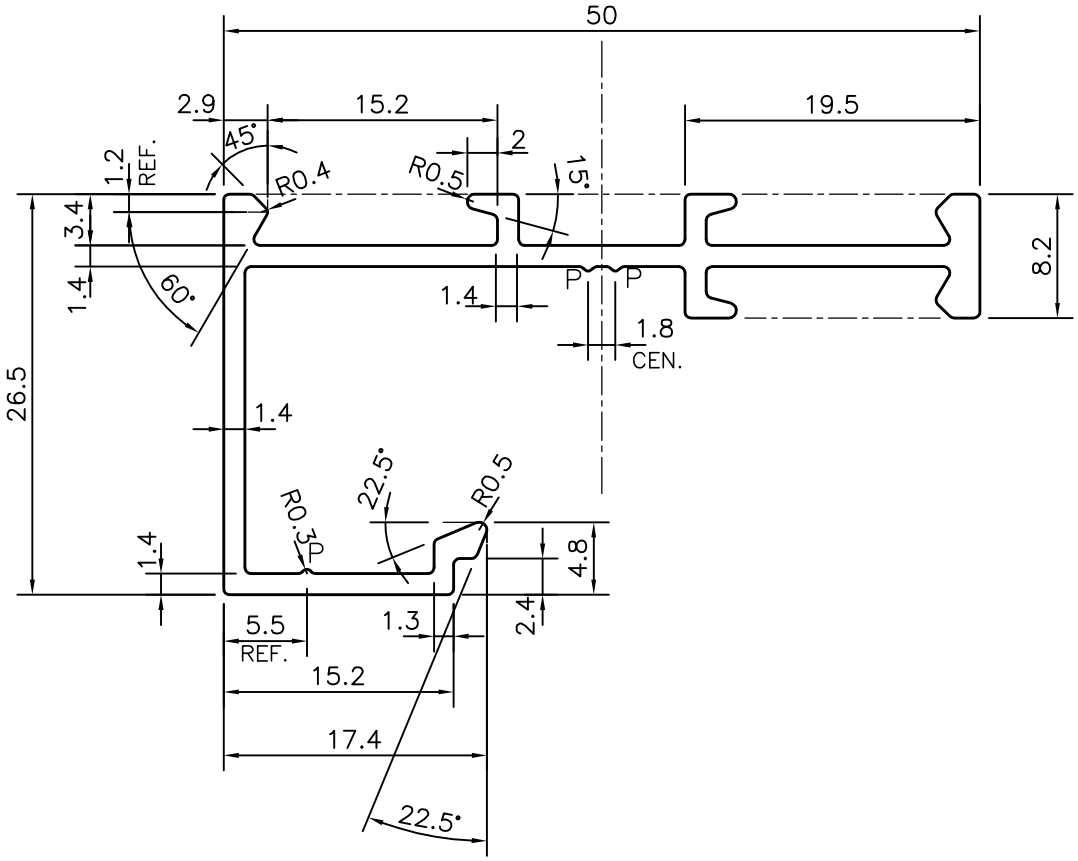

P = PIP 0.3x90° (3 PLACE)

JINDAL SYMBOL OF QUALITY AN ISO 9001 COMPANY	***JINDAL ALUMINIUM LTD.*** *BANGALORE–560073 (INDIA)*		NAME	DATE
		DRAWN	J.P.KAUSHIK	05–05–2014
		CHECKED		
		APPROVED	S.S.GARG	23–05–2014
1. ALL DIMENSIONS ARE IN mm. 2. ROUND OFF ALL SHARP CORNERS WITH 0.40 mm. 3. TOLERANCES WILL BE AS PER IS:3965–1981, UNLESS OTHERWISE SPECIFIED		SCALE		2:1
		AREA mm^2		172.963
		PERIMETER mm.		231.736
		WEIGHT kg/m		0.467
PARTY'S NAME	H.V.ART N GLASS PVT. LTD., DELHI	DRAWING No.		SECTION No.
PARTY'S DRAWING No.	AS PER DRAWING (SAF003)	P–13523		–
ALLOY & TEMPER	6063 T6	E0152		E0152
DESCRIPTION	ARCHITECTURAL SECTION			