P–13754
E0172

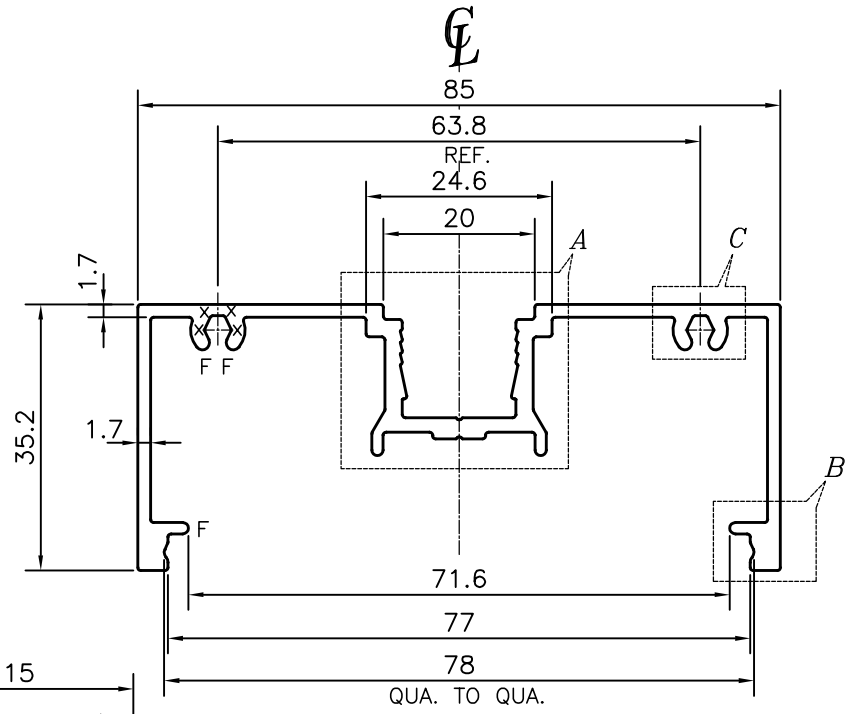

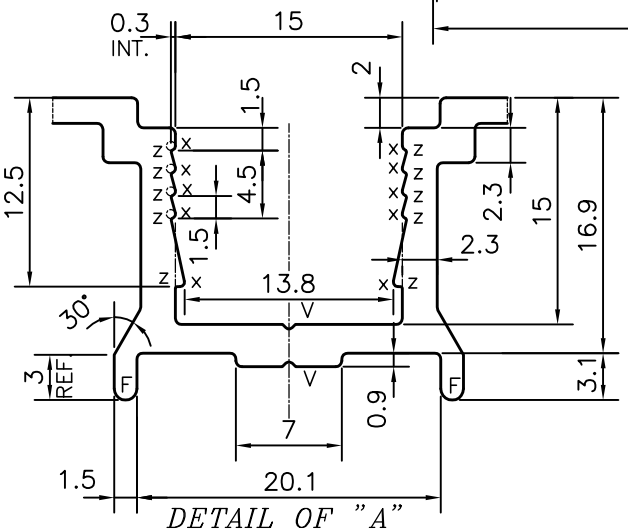

DETAIL OF "A"
SCALE 2:1

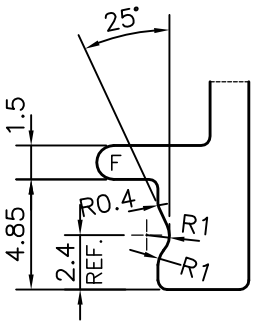

DETAIL OF "B"
SCALE 3:1

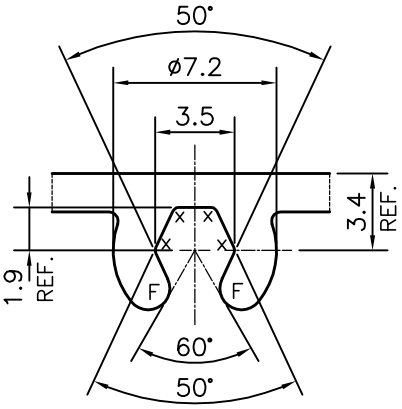

DETAIL OF "C"
SCALE 3:1

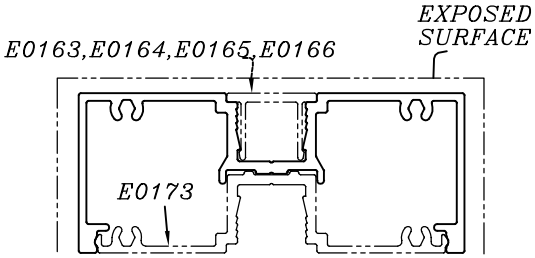

X = RADIUS 0.3 mm. (18 PLACES)
Z = RADIUS 0.1 mm. (10 PLACES)
F = FULL RADIUS (8 PLACES)
V = VEE GROOVE 0.3x90° (2 PLACES)

TOLERANCES ON OVERALL WIDTHS & WIDTHS ACROSS FLATS OF BARS, & REGULAR SECTIONS

UPTO 6.40mm – ±0.20	UPTO 32.0mm – ±0.38	UPTO 120.0mm – ±0.85	1. STRAIGHTNESS=1.7mm/M
UPTO 10.0mm – ±0.23	UPTO 50.0mm – ±0.46	UPTO 160.0mm – ±1.02	2. TWIST=1.7mm/M
UPTO 12.0mm – ±0.25	UPTO 60.0mm – ±0.53	UPTO 200.0mm – ±1.14	3. ANGULARITY= ±2°
UPTO 16.0mm – ±0.28	UPTO 80.0mm – ±0.69	UPTO 250.0mm – ±1.40	4. FLATNESS =0.007xWIDTH
UPTO 25.0mm – ±0.30	UPTO 100.0mm – ±0.75	UPTO 300.0mm – ±1.65	

JINDAL
SYMBOL OF QUALITY
AN ISO 9001 COMPANY

JINDAL ALUMINIUM LTD.

BANGALORE–560073 (INDIA)

	NAME	DATE
DRAWN	PARVESH	19–07–2014
CHECKED		
APPROVED	S.S.GARG	24–07–2014

1. ALL DIMENSIONS ARE IN mm.
2. ROUND OFF ALL SHARP CORNERS WITH 0.40 mm.
3. TOLERANCES WILL BE AS PER IS:3965–1981 , UNLESS OTHERWISE SPECIFIED

SCALE	1:1
AREA mm^2	423.374
PERIMETER mm.	432.258
WEIGHT kg/m	1.143

PARTY'S NAME	SURFACES, BANGALORE
PARTY'S DRAWING No.	AS PER AUTOCAD DRAWING & REQUIREMENT
ALLOY & TEMPER	HE9 WP
DESCRIPTION	ARCHITECTURAL SECTION

DRAWING No.	SECTION No.
P–13754	–
E0172	E0172