P–13268	
S3956	
E0187	

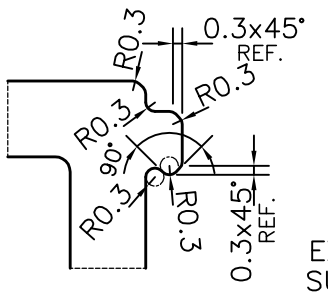

DETAIL OF "A"
SCALE 4:1

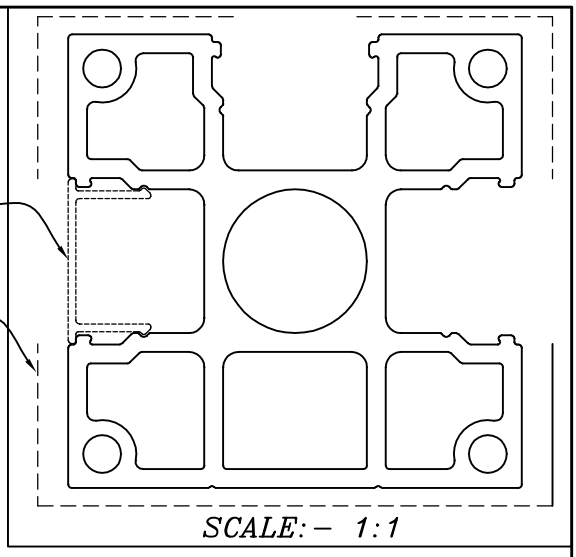

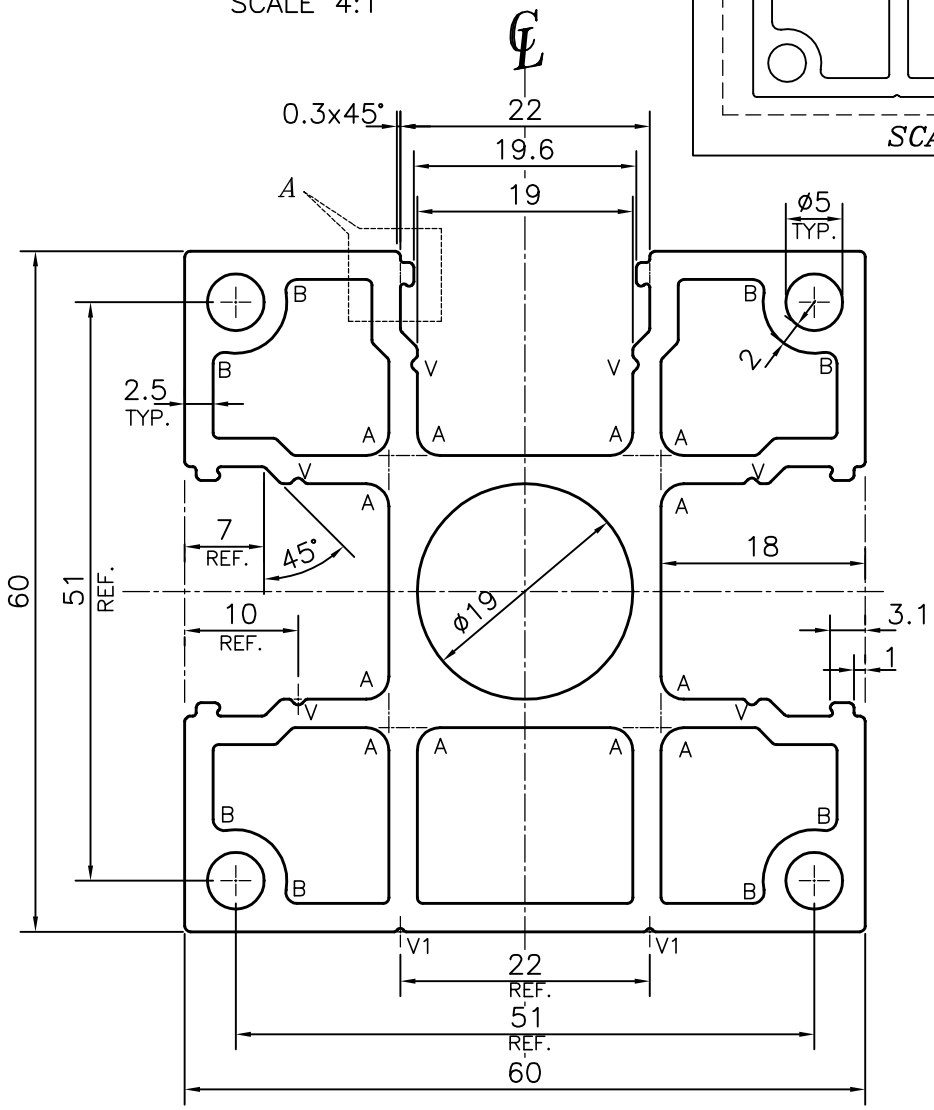

A = RADIUS 2 mm. (12 PLACES)
B = RADIUS 1 mm. (8 PLACES)
V = VEE GROOVE 0.5x90° mm. (6 PLACES)
V1 = VEE GROOVE 0.3x90° (2 PLACES)

JINDAL
SYMBOL OF QUALITY
AN ISO 9001 COMPANY

JINDAL ALUMINIUM LTD.

BANGALORE–560073 (INDIA)

	NAME	DATE
DRAWN	*SRIVATHSA*	16–12–2013
CHECKED		
APPROVED	S.S.GARG	21–12–2013

1. ALL DIMENSIONS ARE IN mm.
2. ROUND OFF ALL SHARP CORNERS WITH 0.50 mm.
3. TOLERANCES WILL BE AS PER IS:6477–1983 , UNLESS OTHERWISE SPECIFIED

SCALE	1.5:1
AREA mm^2	1116.925
PERIMETER mm.	350.019
WEIGHT kg/m	3.016

PARTY'S NAME	GSC GLASS PVT. LTD., NOIDA
PARTY'S DRAWING No.	AS PER DRAWING
ALLOY & TEMPER	HE9 WP
DESCRIPTION	DISPLAY SECTION

DRAWING No.	SECTION No.
P–13268	–
S3956	S3956
E0187	E0187