P–14221
E0227

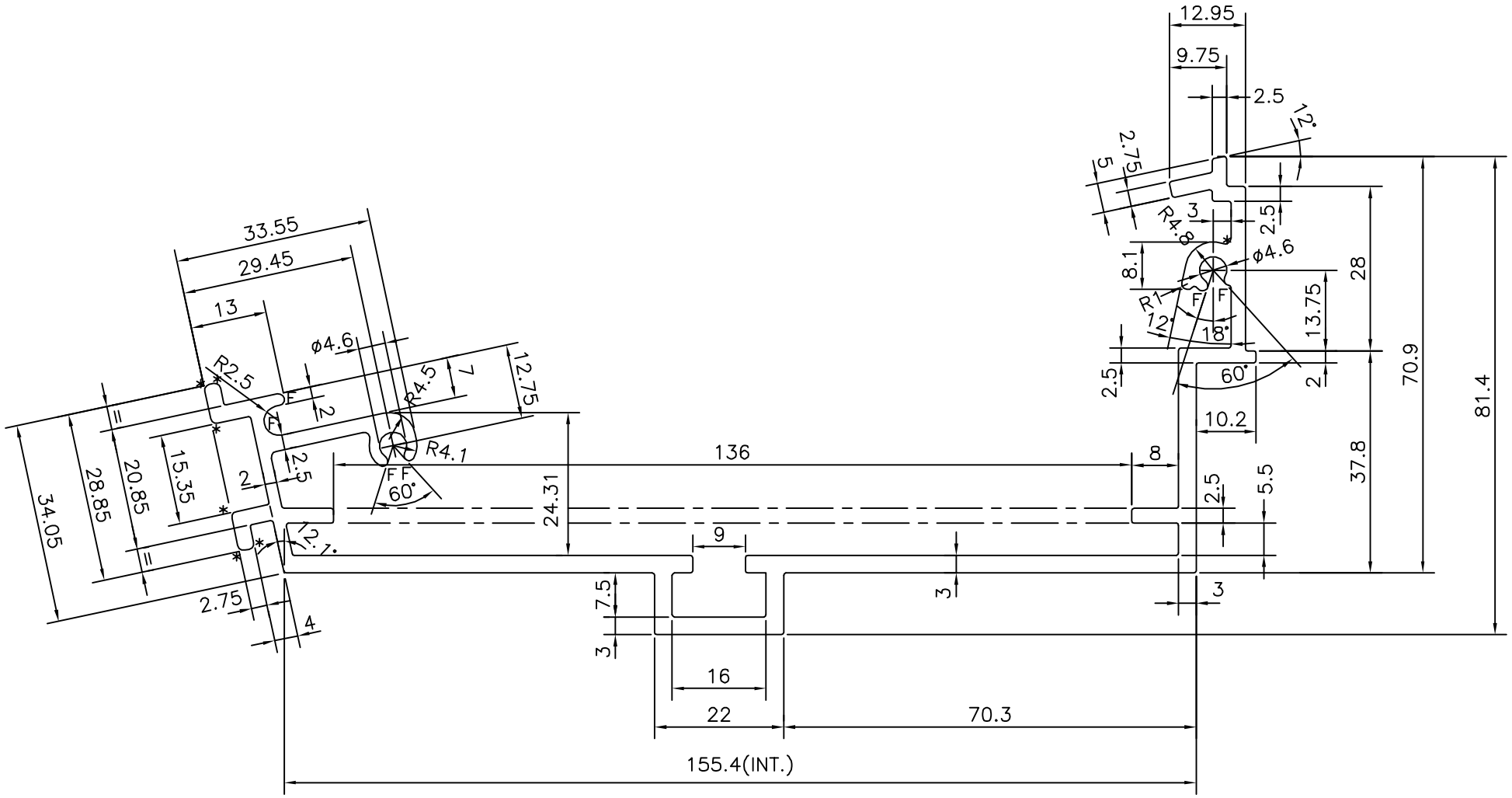

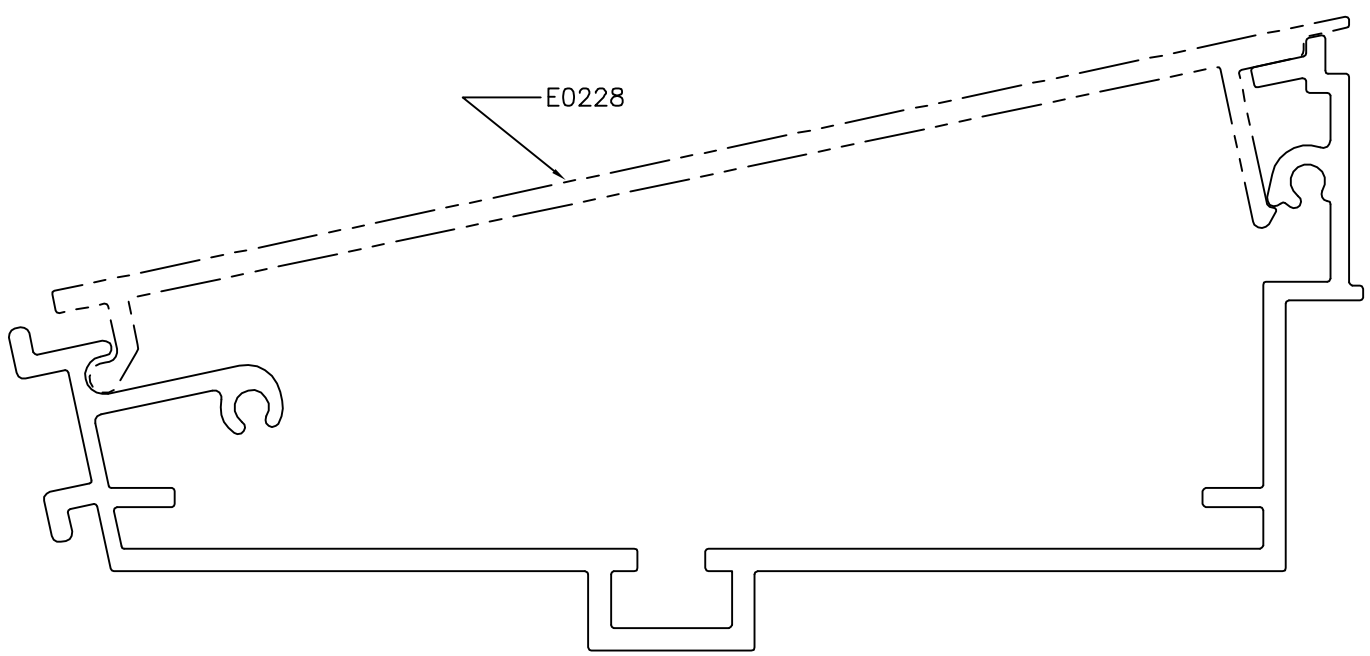

F = FULL RADIUS (4 PLACES)
* = RADIUS 1.0 (7 PLACES)

JINDAL
SYMBOL OF QUALITY
AN ISO 9001 COMPANY

JINDAL ALUMINIUM LTD.
BANGALORE–560073 (INDIA)

1. ALL DIMENSIONS ARE IN mm.
2. ROUND OFF ALL SHARP CORNERS WITH 0.40 mm.
3. TOLERANCES WILL BE AS PER IS:3965–1981 UNLESS OTHERWISE SPECIFIED

		NAME	DATE
DRAWN		J.P.KAUSHIK	05–12–2014
CHECKED			
APPROVED		S.S.GARG	16–12–2014
SCALE			1:1
AREA mm^2			1079.151
PERIMETER mm.			769.203
WEIGHT kg/m			2.914
PARTY'S NAME	ALUFIT (INDIA) PVT. LTD., BANGALORE		
PARTY'S DRAWING No.	GD–C & AutoCAD DRAWING		
ALLOY & TEMPER	6063 T6		
DESCRIPTION	ADOPTER–2		

DRAWING No.	SECTION No.
P–14221	–
E0227	E0227