| |
|---|
| P–14200 |
| E0247 |
| |

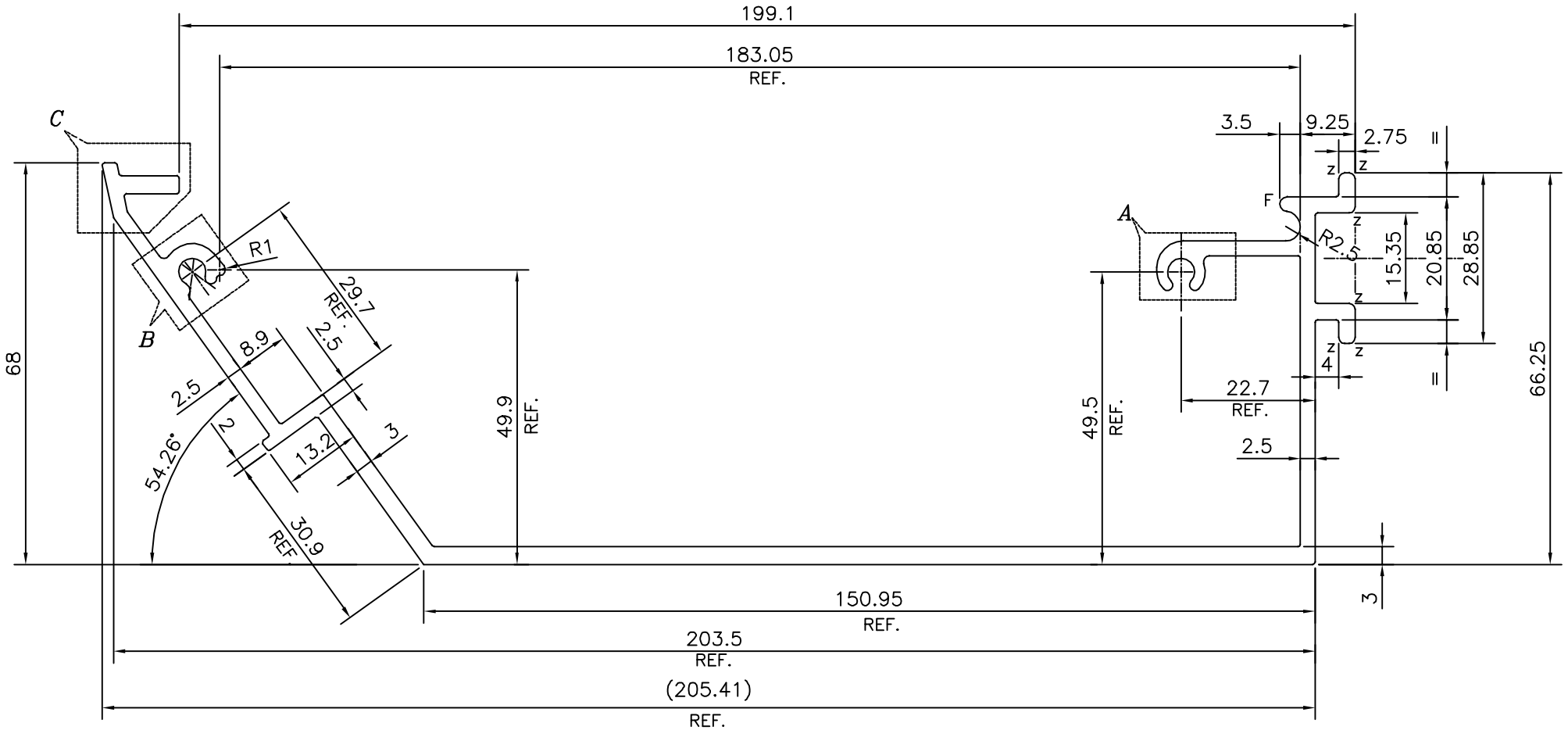


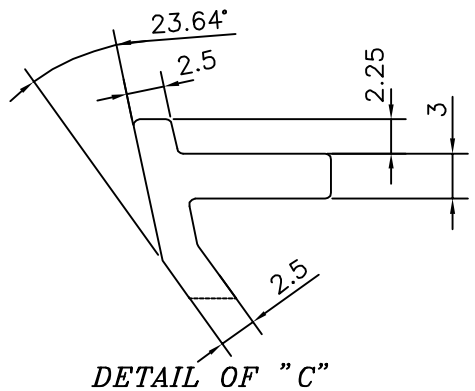


*DETAIL OF "C"*
SCALE 2:1

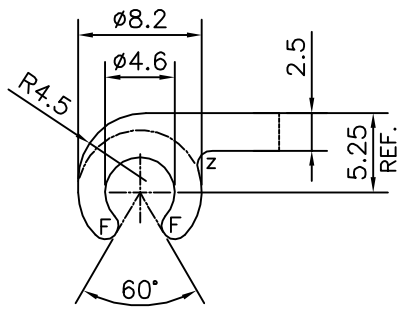


*DETAIL OF "A"*
SCALE 2:1

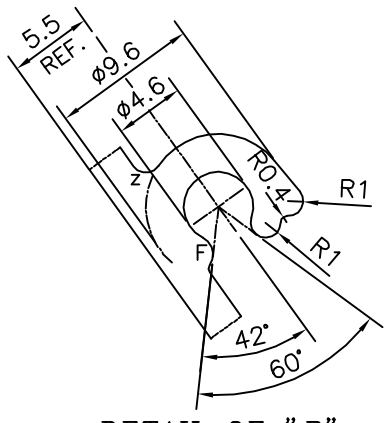


*DETAIL OF "B"*
SCALE 2:1

F = FULL RADIUS (5 PLACES)
Z = RADIUS 1 mm. (8 PLACES)

*SCALE– 0.5:1*

| TOLERANCES ON OVERALL WIDTHS & WIDTHS ACROSS FLATS OF BARS, & REGULAR SECTIONS | | | |
|---|---|---|---|
| UPTO 6.40mm – ±0.20<br>UPTO 10.0mm – ±0.23<br>UPTO 12.0mm – ±0.25<br>UPTO 16.0mm – ±0.28<br>UPTO 25.0mm – ±0.30 | UPTO 32.0mm – ±0.38<br>UPTO 50.0mm – ±0.46<br>UPTO 60.0mm – ±0.53<br>UPTO 80.0mm – ±0.69<br>UPTO 100.0mm – ±0.75 | UPTO 120.0mm – ±0.85<br>UPTO 160.0mm – ±1.02<br>UPTO 200.0mm – ±1.14<br>UPTO 250.0mm – ±1.40<br>UPTO 300.0mm – ±1.65 | 1. STRAIGHTNESS=1.7mm/M<br>2. TWIST=1.7mm/M<br>3. ANGULARITY= ±2°<br>4. FLATNESS =0.007xWIDTH |

JINDAL
SYMBOL OF QUALITY
AN ISO 9001 COMPANY

**JINDAL ALUMINIUM LTD.**
*BANGALORE–560073 (INDIA)*

1. ALL DIMENSIONS ARE IN mm.
2. ROUND OFF ALL SHARP CORNERS WITH 0.40 mm.
3. TOLERANCES WILL BE AS PER IS:3965–1981 , UNLESS OTHERWISE SPECIFIED

| | NAME | DATE |
|---|---|---|
| DRAWN | *PARVESH* | 05–12–2014 |
| CHECKED | | |
| APPROVED | S.S.GARG | 16–12–2014 |
| SCALE | | 1:1 |
| AREA $mm^2$ | | 1072.561 |
| PERIMETER mm. | | 769.095 |
| WEIGHT kg/m | | 2.896 |

| | |
|---|---|
| PARTY'S NAME | ALUFIT (INDIA) PRIVATE LIMITED, BANGALORE |
| PARTY'S DRAWING No. | AS PER AUTOCAD DRAWING–GD–C2 & REQUIREMENT |
| ALLOY & TEMPER | 6063 T6 |
| DESCRIPTION | CURTAIN WALL SECTION–ADOPTER–7 |

| DRAWING No. | SECTION No. |
|---|---|
| P–14200 | – |
| E0247 | E0247 |
| | |
| | |
| | |