P–14232	
E0251	

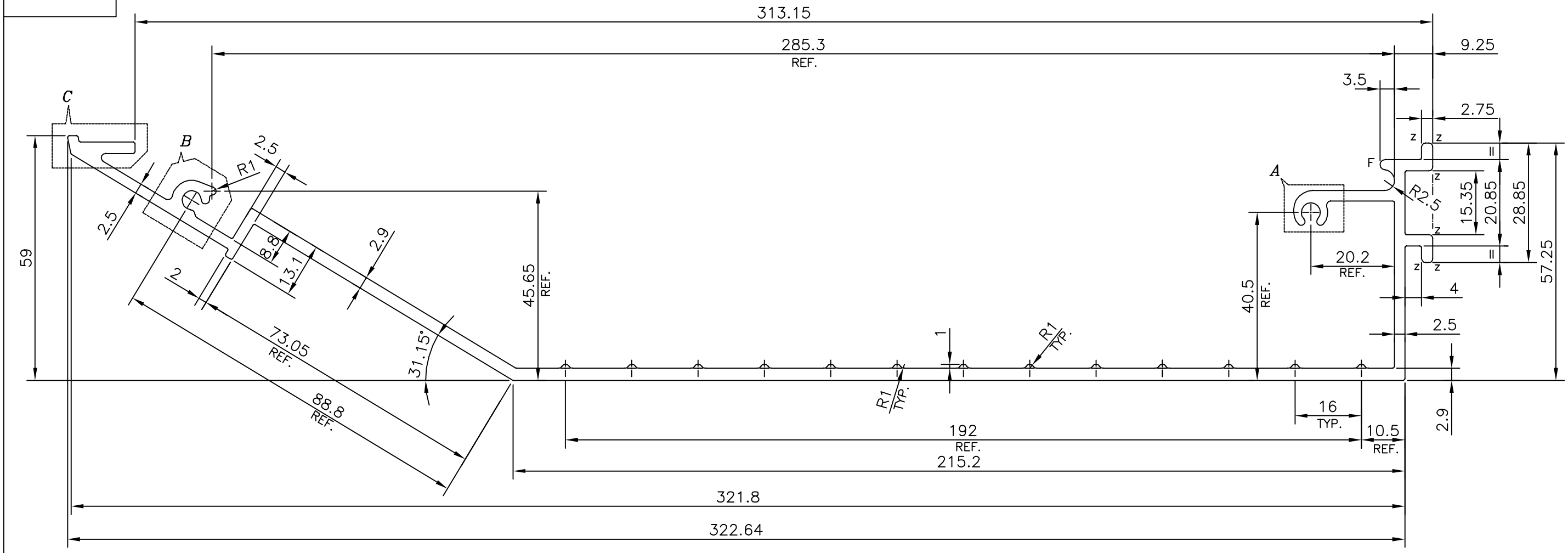

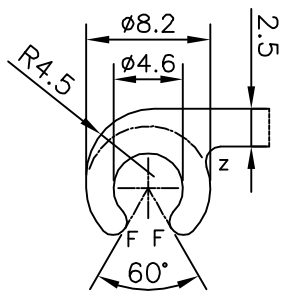

DETAIL OF "A"
SCALE 2:1

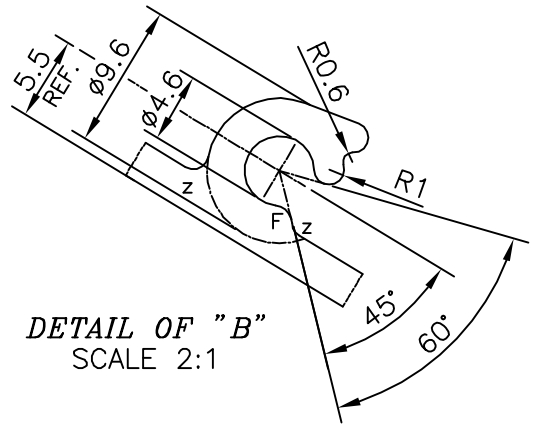

DETAIL OF "B"
SCALE 2:1

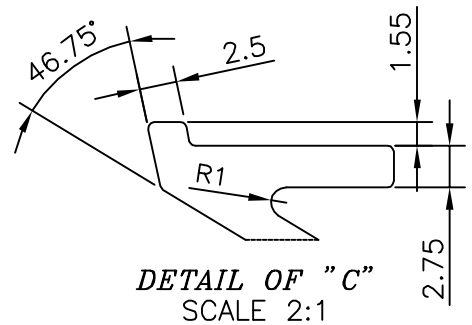

DETAIL OF "C"
SCALE 2:1

F = FULL RADIUS (4 PLACES)
Z = RADIUS 1 mm. (9 PLACES)

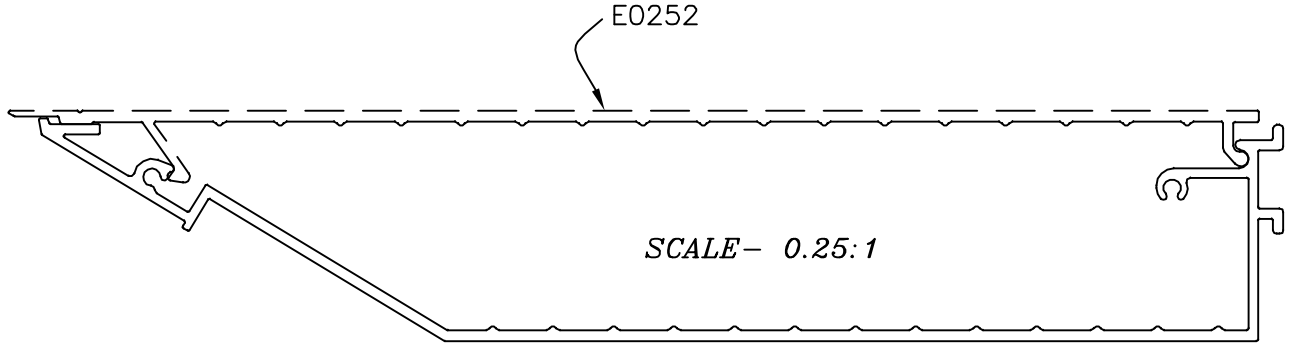

SCALE– 0.25:1

TOLERANCES ON OVERALL WIDTHS & WIDTHS ACROSS FLATS OF BARS, & REGULAR SECTIONS			
UPTO 6.40mm – ±0.20	UPTO 32.0mm – ±0.38	UPTO 120.0mm – ±0.85	1. STRAIGHTNESS=1.7mm/M
UPTO 10.0mm – ±0.23	UPTO 50.0mm – ±0.46	UPTO 160.0mm – ±1.02	2. TWIST=1.7mm/M
UPTO 12.0mm – ±0.25	UPTO 60.0mm – ±0.53	UPTO 200.0mm – ±1.14	3. ANGULARITY= ±2°
UPTO 16.0mm – ±0.28	UPTO 80.0mm – ±0.69	UPTO 250.0mm – ±1.40	4. FLATNESS =0.007xWIDTH
UPTO 25.0mm – ±0.30	UPTO 100.0mm – ±0.75	UPTO 300.0mm – ±1.65	

JINDAL
SYMBOL OF QUALITY
AN ISO 9001 COMPANY

JINDAL ALUMINIUM LTD.
BANGALORE–560073 (INDIA)

1. ALL DIMENSIONS ARE IN mm.
2. ROUND OFF ALL SHARP CORNERS WITH 0.40 mm.
3. TOLERANCES WILL BE AS PER IS:3965–1981 , UNLESS OTHERWISE SPECIFIED

		NAME	DATE
DRAWN		PARVESH	05–12–2014
CHECKED			
APPROVED		S.S.GARG	16–12–2014
SCALE			1:1
AREA mm^2			1358.384
PERIMETER mm.			961.986
WEIGHT kg/m			3.668

		DRAWING No.	SECTION No.
PARTY'S NAME	ALUFIT (INDIA) PRIVATE LIMITED, BANGALORE		
PARTY'S DRAWING No.	AS PER AUTOCAD DRAWING–GD–C1 & REQUIREMENT	P–14232	–
ALLOY & TEMPER	6063 T6	E0251	E0251
DESCRIPTION	CURTAIN WALL SECTION–ADOPTER–5		