P–14234
E0253

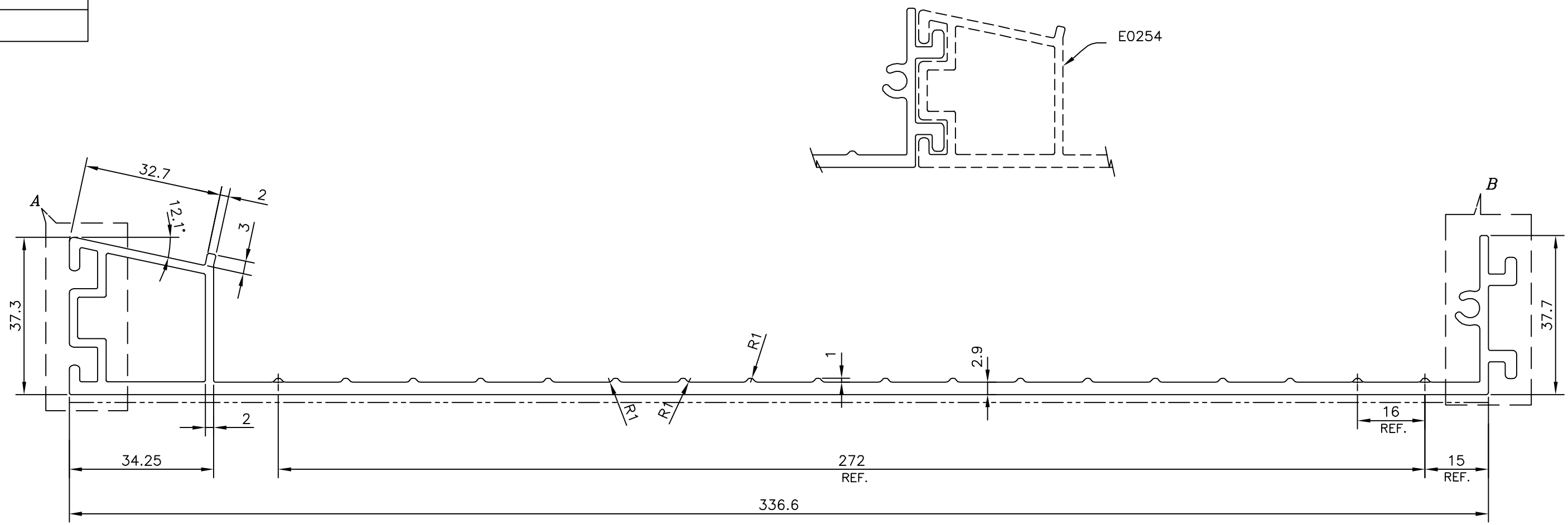

Z = RADIUS 1 mm. (13 PLACES)
F = FULL RADIUS (2 PLACES)
—--— EXPOSED SURFACE

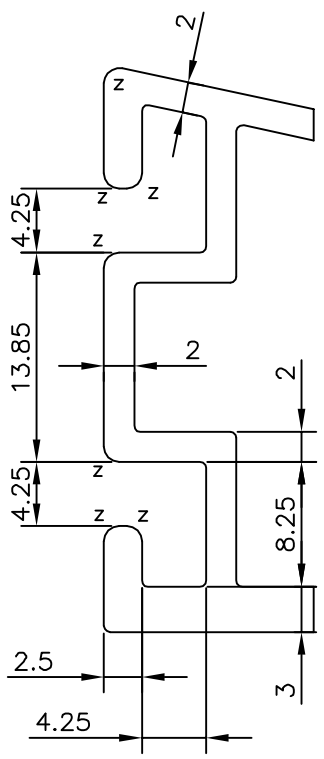

DETAIL OF "A"
SCALE 2:1

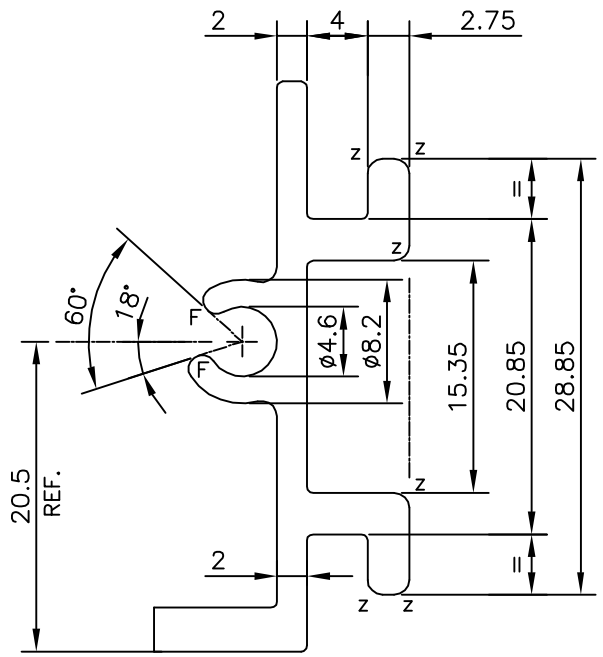

DETAIL OF "B"
SCALE 2:1

TOLERANCES ON OVERALL WIDTHS & WIDTHS ACROSS FLATS OF BARS, & REGULAR SECTIONS			
UPTO 6.40mm – ±0.20	UPTO 32.0mm – ±0.38	UPTO 120.0mm – ±0.85	1. STRAIGHTNESS=1.7mm/M
UPTO 10.0mm – ±0.23	UPTO 50.0mm – ±0.46	UPTO 160.0mm – ±1.02	2. TWIST=1.7mm/M
UPTO 12.0mm – ±0.25	UPTO 60.0mm – ±0.53	UPTO 200.0mm – ±1.14	3. ANGULARITY= ±2°
UPTO 16.0mm – ±0.28	UPTO 80.0mm – ±0.69	UPTO 250.0mm – ±1.40	4. FLATNESS =0.007xWIDTH
UPTO 25.0mm – ±0.30	UPTO 100.0mm – ±0.75	UPTO 300.0mm – ±1.65	

JINDAL
SYMBOL OF QUALITY
AN ISO 9001 COMPANY

JINDAL ALUMINIUM LTD.
BANGALORE–560073 (INDIA)

1. ALL DIMENSIONS ARE IN mm.
2. ROUND OFF ALL SHARP CORNERS WITH 0.40 mm.
3. TOLERANCES WILL BE AS PER IS:6477–1983 , UNLESS OTHERWISE SPECIFIED

		NAME	DATE
DRAWN		PARVESH	05–12–2014
CHECKED			
APPROVED		S.S.GARG	16–12–2014
SCALE			1:1
AREA mm^2			1398.947
PERIMETER mm.			927.728
WEIGHT kg/m			3.777

PARTY'S NAME	ALUFIT (INDIA) PRIVATE LIMITED, BANGALORE
PARTY'S DRAWING No.	AS PER AUTOCAD DRAWING–GD–B1 & REQUIREMENT
ALLOY & TEMPER	6063 T6
DESCRIPTION	CURTAIN WALL SECTION–BEADING–2

DRAWING No.	SECTION No.
P–14234	–
E0253	E0253