P–14114

E0260

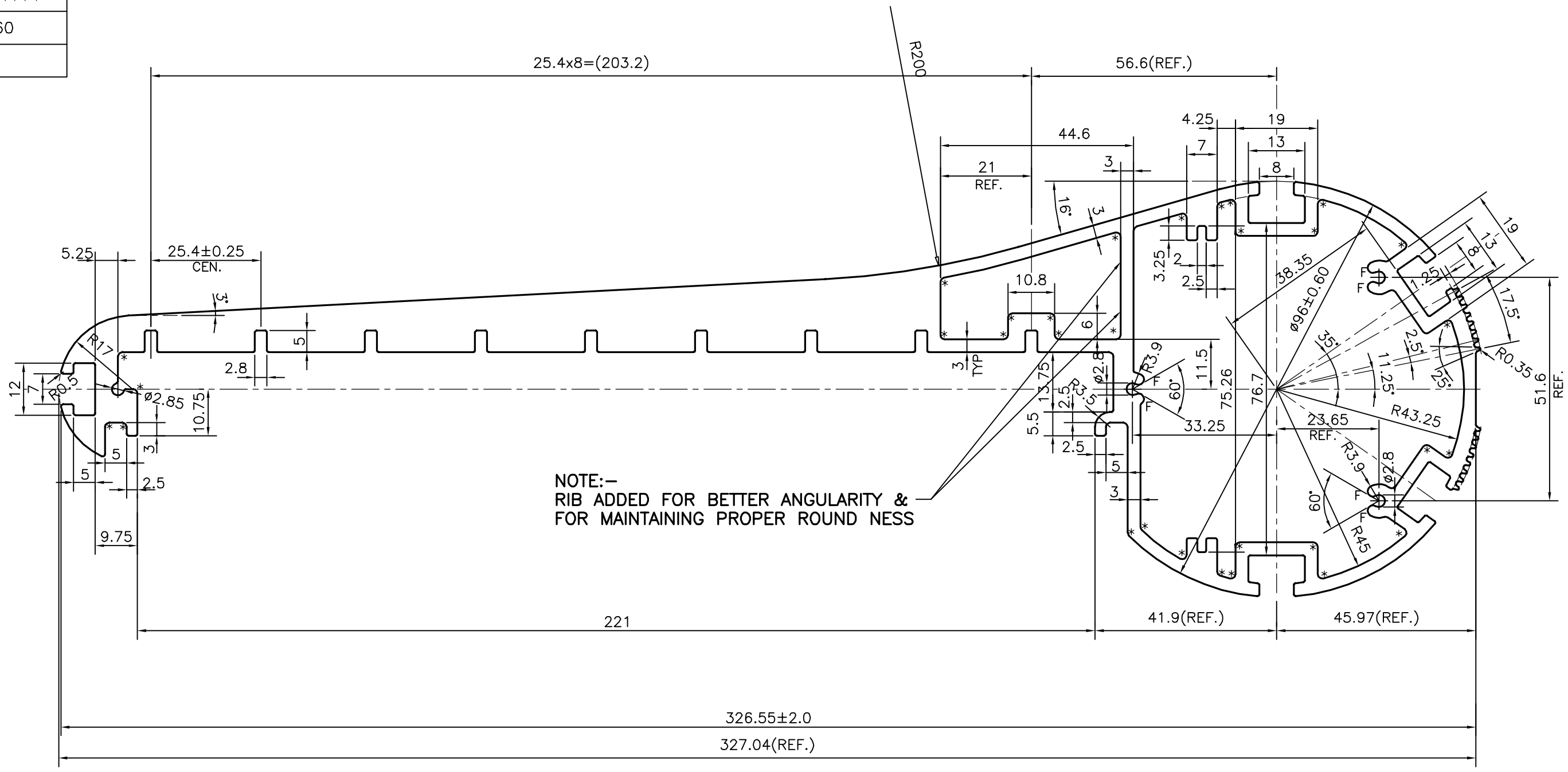

ISSUE–2:–

1. RIB ADDED FOR BETTER ANGULARITY & FOR MAINTAINING PROPER ROUNDNESS
2. WEIGHT ALSO CHANGED FROM 11.530 Kg/m TO 11.746 Kg/m

* = 1.0 RADIUS (31 PLACES)
F = FULL RADIUS (6 PLACES)

			NAME	DATE
SYMBOL OF QUALITY AN ISO 9001 COMPANY	*JINDAL ALUMINIUM LTD.* *BANGALORE–560073 (INDIA)*	DRAWN	J.P.KAUSHIK	08–05–2015
		CHECKED		
		APPROVED	S.S.GARG	11–05–2015
1. ALL DIMENSIONS ARE IN mm. 2. ROUND OFF ALL SHARP CORNERS WITH 0.40 mm. 3. TOLERANCES WILL BE AS PER BS:EN–12020–2 UNLESS OTHERWISE SPECIFIED		SCALE		1:1
		AREA mm^2		4350.494
		PERIMETER mm.		1071.525
		WEIGHT kg/m		11.746
PARTY'S NAME	EON ELECTRIC LTD., NOIDA	DRAWING No.		SECTION No.
PARTY'S DRAWING No.	LEDSL01_05_001	P–14114		–
ALLOY & TEMPER	6063 T6	E0260		E0260–ISSUE–2
DESCRIPTION	ELECTRICAL SECTION			