P−14147
E0266

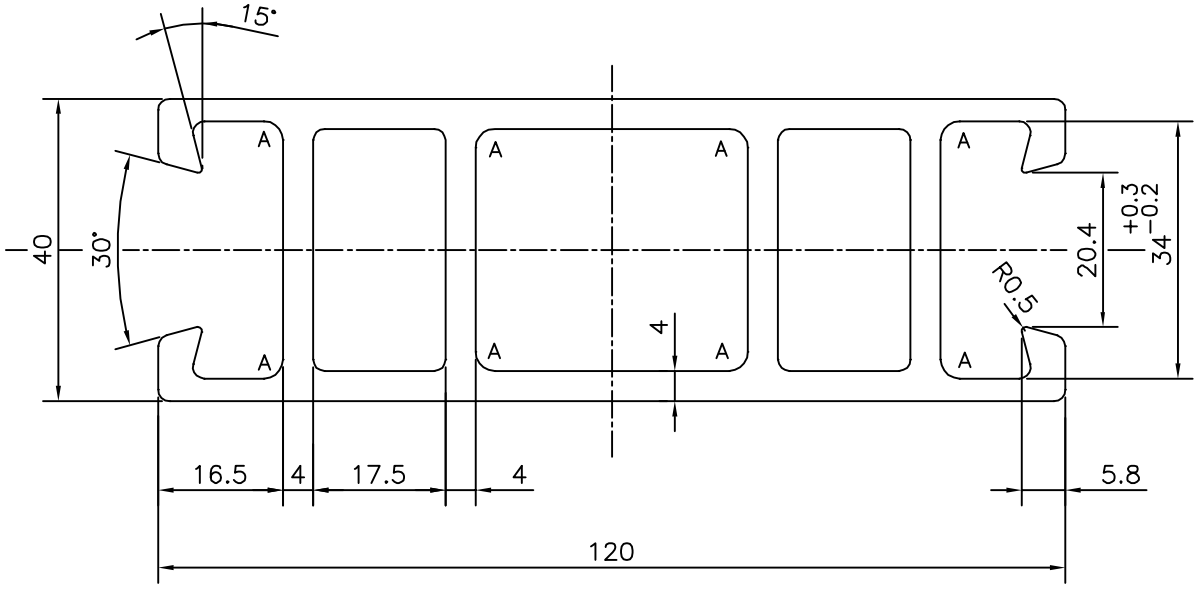

TOLERANCE CHART CD = CIRCUMSCRIBING CIRCLE

DIMENSION	CD≤100	100<CD≤200	200<CD≤300	300<CD≤500
UPTO 10mm	±0.25	±0.30	±0.35	±0.40
10.0 −25.0	±0.30	±0.40	±0.50	±0.60
25.0 −50.0	±0.50	±0.60	±0.80	±0.90
50.0 −100	±0.70	±0.90	±1.10	±1.30
100 − 150	−	±1.10	±1.30	±1.50
150 − 200	−	±1.3	±1.50	±1.80
200 − 300	−	−	±1.70	±2.10
300 − 450	−	−	−	±2.80

A = RADIUS 2.5 mm. (8 PLACES)

JINDAL

SYMBOL OF QUALITY
AN ISO 9001 COMPANY

JINDAL ALUMINIUM LTD.

BANGALORE−560073 (INDIA)

	NAME	DATE
DRAWN	*PARVESH*	28−11−2014
CHECKED		
APPROVED	S.S.GARG	01−01−2015

1. ALL DIMENSIONS ARE IN mm.
2. ROUND OFF ALL SHARP CORNERS WITH 1.50 mm.
3. TOLERANCES WILL BE AS PER BS:EN−755−9 , UNLESS OTHERWISE SPECIFIED

SCALE	1:1
AREA mm^2	1543.163
PERIMETER mm.	429.361
WEIGHT kg/m	4.167

PARTY'S NAME	WRIGHTBUS INDIA (ENG.) PVT. LTD., KANCHEEPURAM
PARTY'S DRAWING No.	AS PER AUTOCAD DRAWING−AUE−00326
ALLOY & TEMPER	6005 T6
DESCRIPTION	MISC. SECTION

DRAWING No.	SECTION No.
P−14147	−
E0266	E0266