P–14311	
E0270	

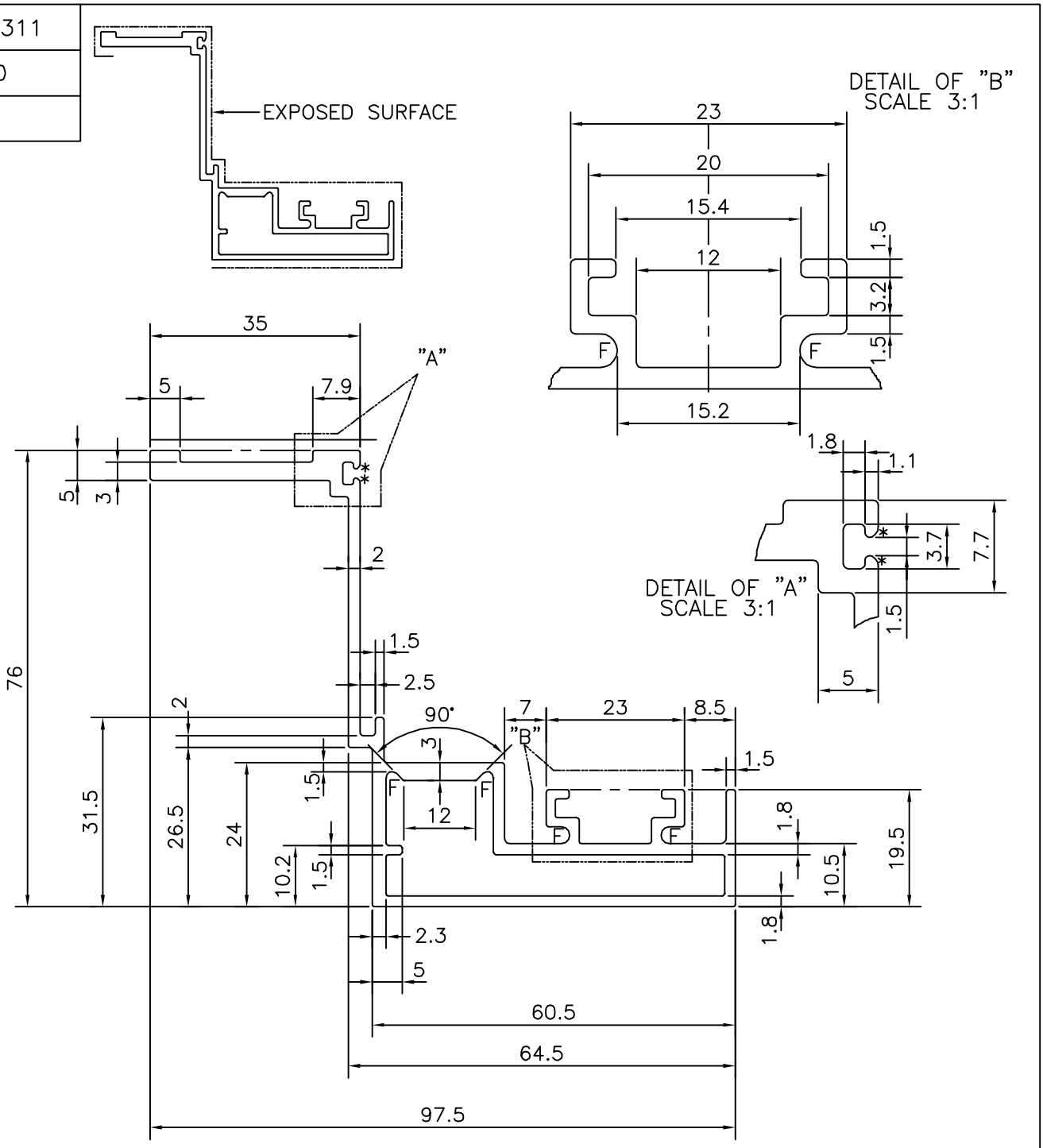

* = 1.0 RADIUS (2 PLACES)

F = FULL RADIUS (4 PLACES)

			NAME	DATE
JINDAL SYMBOL OF QUALITY AN ISO 9001 COMPANY	*JINDAL ALUMINIUM LTD.* *BANGALORE–560073 (INDIA)*	DRAWN	J.P.KAUSHIK	07–01–2015
		CHECKED		
		APPROVED	S.S.GARG	08–01–2015

1. ALL DIMENSIONS ARE IN mm.
2. ROUND OFF ALL SHARP CORNERS WITH 0.40 mm.
3. TOLERANCES WILL BE AS PER IS:6477–1983 UNLESS OTHERWISE SPECIFIED

SCALE	1:1
AREA mm^2	619.503
PERIMETER mm.	434.458
WEIGHT kg/m	1.673

PARTY'S NAME	ALUFIT (INDIA) PVT. LTD., BANGALORE
PARTY'S DRAWING No.	GD–14 & AutoCAD DRAWING
ALLOY & TEMPER	6063 T6
DESCRIPTION	SASH FRAME

DRAWING No.	SECTION No.
P–14311	–
E0270	E0270