P–14293
E0293

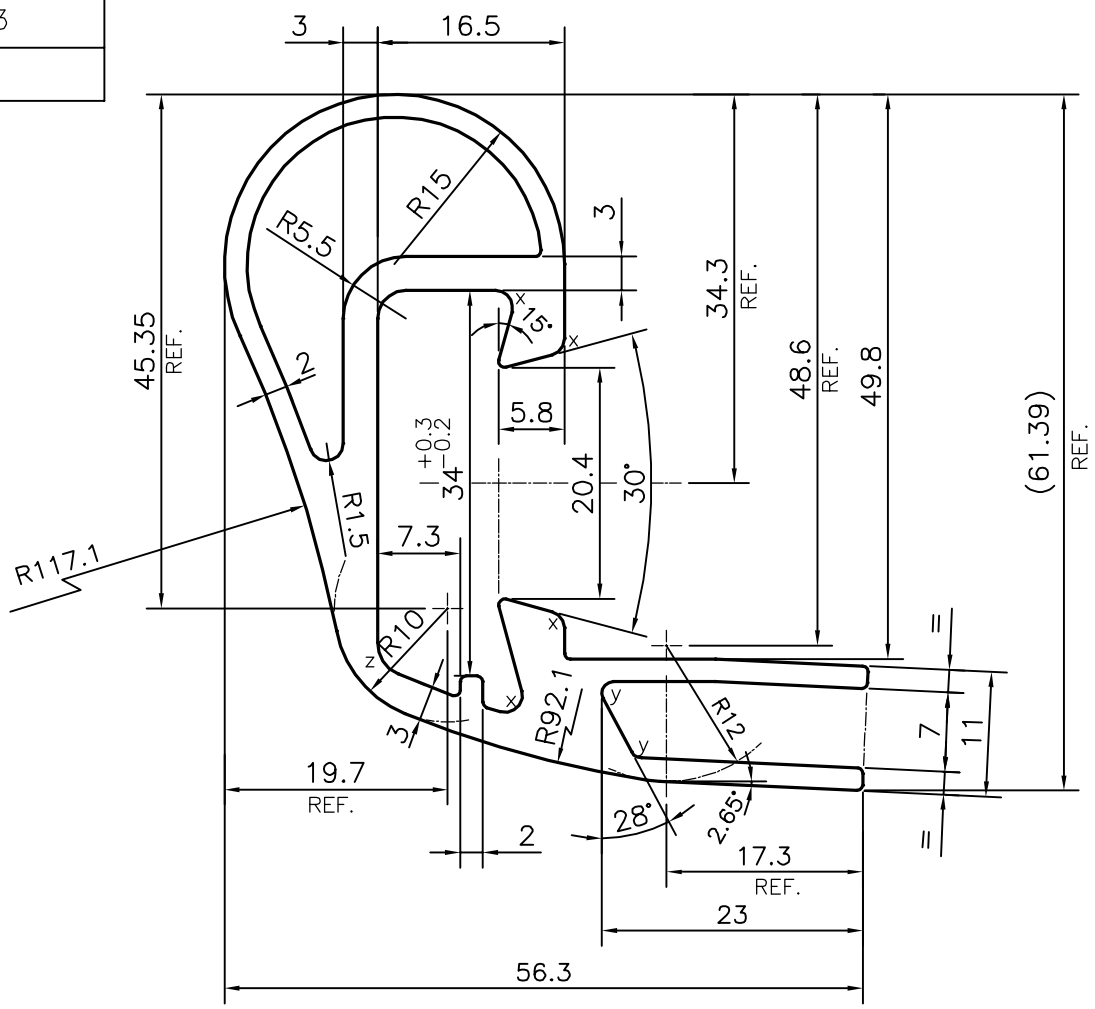

X = RADIUS 1.5 mm. (4 PLACES)
y = RADIUS 1.0 mm. (2 PLACES)
Z = RADIUS 3 mm. (1 PLACE)

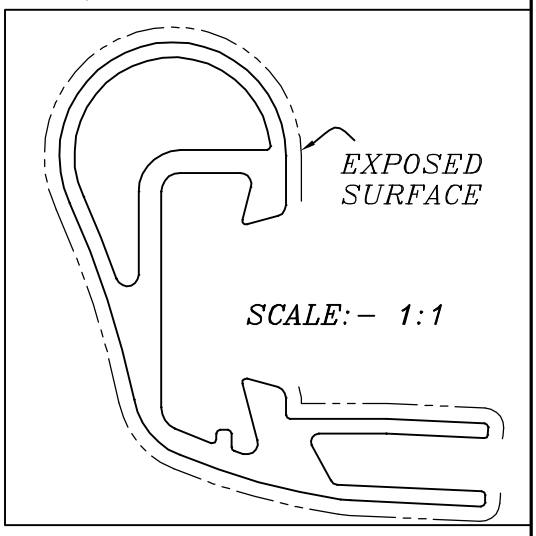

TOLERANCE CHART CD = CIRCUMSCRIBING CIRCLE

DIMENSION	CD≤100	100<CD≤200	200<CD≤300	300<CD≤500
UPTO 10mm	±0.25	±0.30	±0.35	±0.40
10.0 –25.0	±0.30	±0.40	±0.50	±0.60
25.0 –50.0	±0.50	±0.60	±0.80	±0.90
50.0 –100	±0.70	±0.90	±1.10	±1.30
100 – 150	–	±1.10	±1.30	±1.50
150 – 200	–	±1.3	±1.50	±1.80
200 – 300	–	–	±1.70	±2.10
300 – 450	–	–	–	±2.80

JINDAL
SYMBOL OF QUALITY
AN ISO 9001 COMPANY

JINDAL ALUMINIUM LTD.

BANGALORE–560073 (INDIA)

	NAME	DATE
DRAWN	*PARVESH*	30–12–2014
CHECKED		
APPROVED	S.S.GARG	19–04–2015

1. ALL DIMENSIONS ARE IN mm.
2. ROUND OFF ALL SHARP CORNERS WITH 0.50 mm.
3. TOLERANCES WILL BE AS PER BS:EN–755–9 , UNLESS OTHERWISE SPECIFIED

SCALE	1.5:1
AREA mm^2	585.174
PERIMETER mm.	311.214
WEIGHT kg/m	1.580

PARTY'S NAME	WRIGHTBUS INDIA (ENG.) PVT. LTD., KANCHHEPURAM
PARTY'S DRAWING No.	AS PER AUTOCAD DRAWING– AUE–00342
ALLOY & TEMPER	6060 T66
DESCRIPTION	LINING EDGE RAIL SECTION

DRAWING No.	SECTION No.
P–14293	–
E0293	E0293