P–14680

E0299

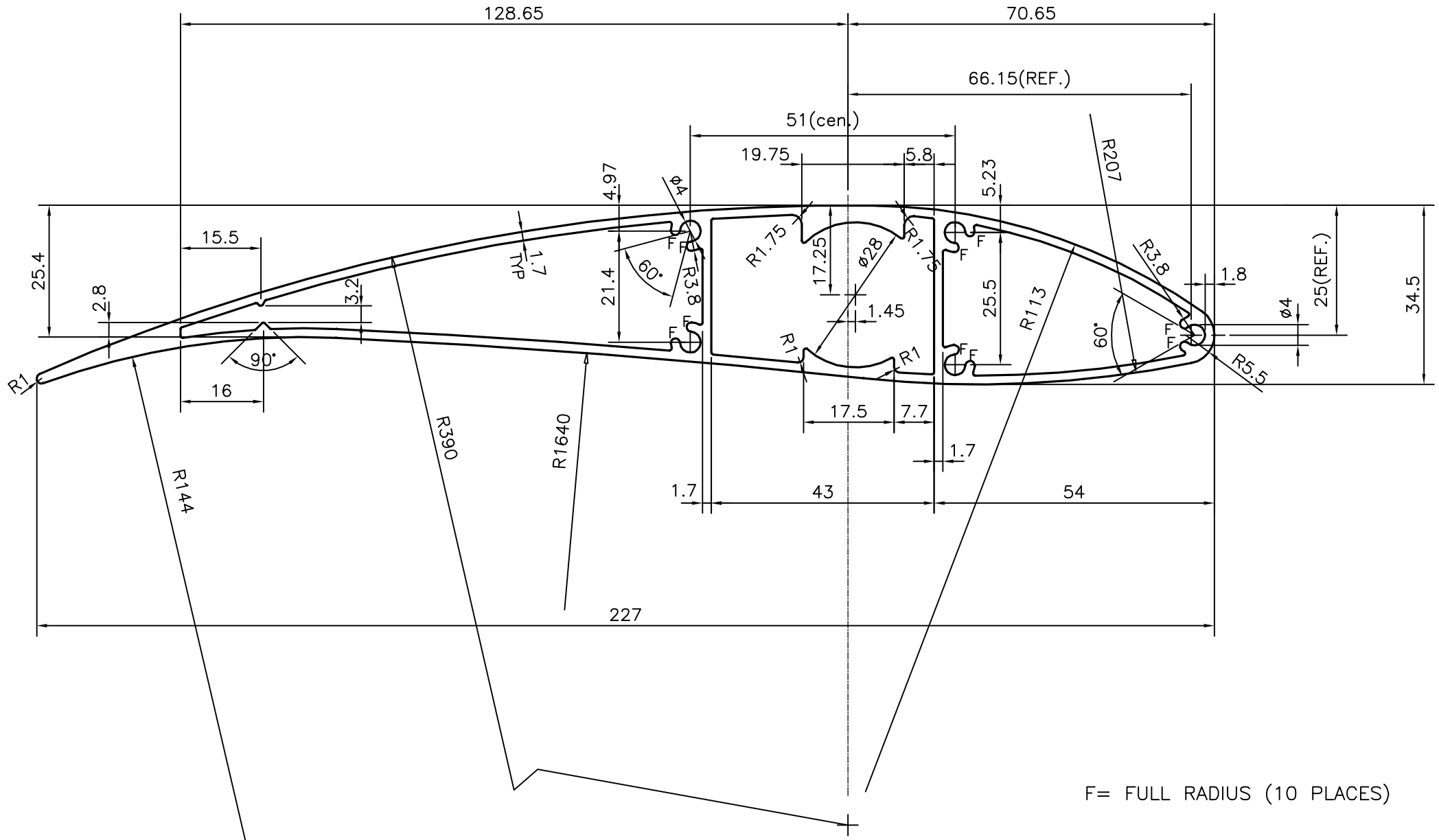

F= FULL RADIUS (10 PLACES)

			NAME	DATE
SYMBOL OF QUALITY AN ISO 9002 COMPANY	*JINDAL ALUMINIUM LTD.* *BANGALORE–560073 (INDIA)*	DRAWN	J.P.KAUSHIK	12–06–2015
		CHECKED		
		APPROVED	S.S.GARG	24–06–2015

1. ALL DIMENSIONS ARE IN mm.
2. ROUND OFF ALL SHARP CORNERS WITH 0.40 mm.
3. TOLERANCES WILL BE AS PER IS:6477–1983 UNLESS OTHERWISE SPECIFIED

SCALE	1:1
AREA mm^2	1032.056
PERIMETER mm.	471.583
WEIGHT kg/m	2.787

PARTY'S NAME	MODERN ENGINEERING INDUSTRIES, BAHADURGARH
PARTY'S DRAWING No.	AS PER SAMPLE & REQUIREMENT
ALLOY & TEMPER	6063 T6
DESCRIPTION	MISC. SECTION

DRAWING No.	SECTION No.
P–14680	–
E0299	E0299