P−14716−1
E0319

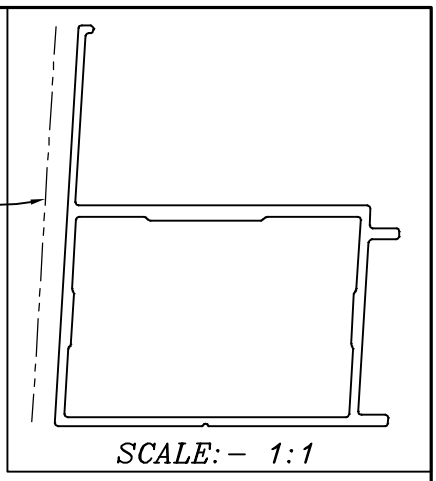

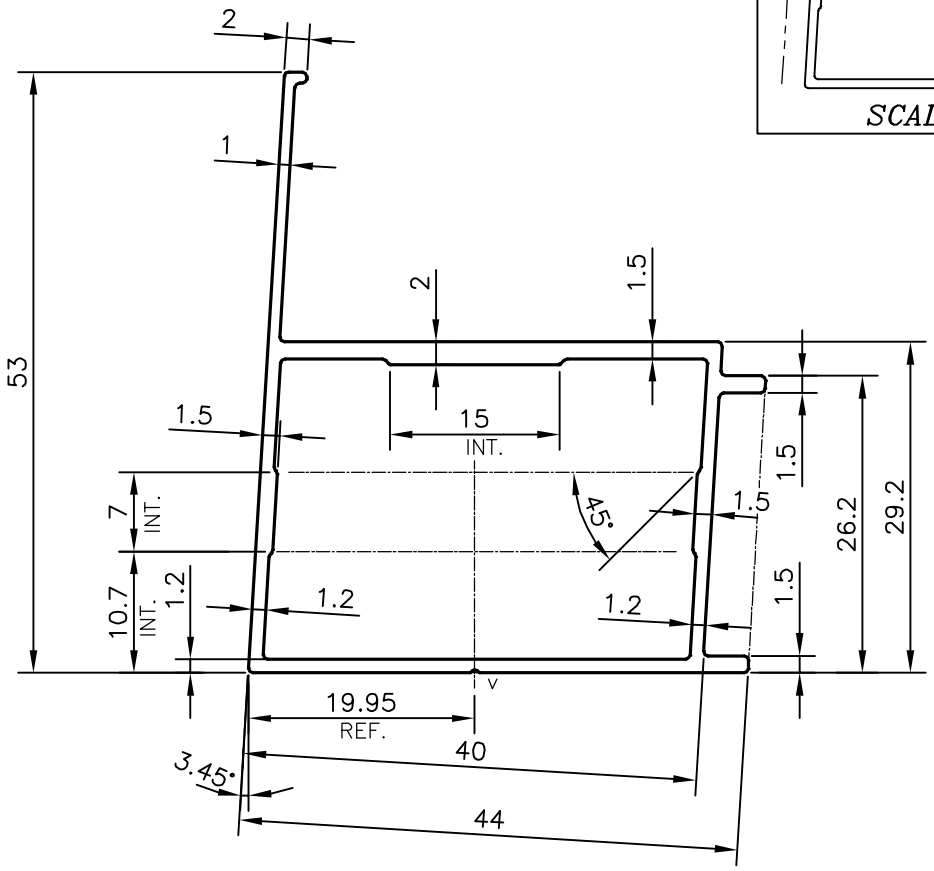

ANGULARITY TOLERANCE = ±1°
TRY TO MAINTAIN AS CLOSER ±0.75

V = VEE GROOVE 0.3x90° (1 PLACE)

TOLERANCES ON OVERALL WIDTHS & WIDTHS ACROSS FLATS OF BARS, & REGULAR SECTIONS

UPTO 6.40mm − ±0.20	UPTO 32.0mm − ±0.38	UPTO 120.0mm − ±0.85	1. STRAIGHTNESS=1.7mm/M
UPTO 10.0mm − ±0.23	UPTO 50.0mm − ±0.46	UPTO 160.0mm − ±1.02	2. TWIST=1.7mm/M
UPTO 12.0mm − ±0.25	UPTO 60.0mm − ±0.53	UPTO 200.0mm − ±1.14	3. FLATNESS =0.003xWIDTH
UPTO 16.0mm − ±0.28	UPTO 80.0mm − ±0.69	UPTO 250.0mm − ±1.40	
UPTO 25.0mm − ±0.30	UPTO 100.0mm − ±0.75	UPTO 300.0mm − ±1.65	

JINDAL
SYMBOL OF QUALITY
AN ISO 9001 COMPANY

JINDAL ALUMINIUM LTD.
BANGALORE−560073 (INDIA)

	NAME	DATE
DRAWN	PARVESH	30−06−2015
CHECKED		
APPROVED	B.NATARAJA	17−07−2015

1. ALL DIMENSIONS ARE IN mm.
2. ROUND OFF ALL SHARP CORNERS WITH 0.40 mm.
3. TOLERANCES WILL BE AS PER IS:6477−1983 , UNLESS OTHERWISE SPECIFIED

SCALE	1.5:1
AREA mm^2	220.764
PERIMETER mm.	202.121
WEIGHT kg/m	0.596

PARTY'S NAME	ALUFIT (INDIA) PRIVATE LIMITED, BANGALORE
PARTY'S DRAWING No.	AS PER AUTOCAD DRAWING−INT−17
ALLOY & TEMPER	6063 T6
DESCRIPTION	CURTAIN WALL SECTION−MID TRANSOM SP. SPACER

DRAWING No.	SECTION No.
P−14716−1	−
E0319	E0319