P–14726
E0329

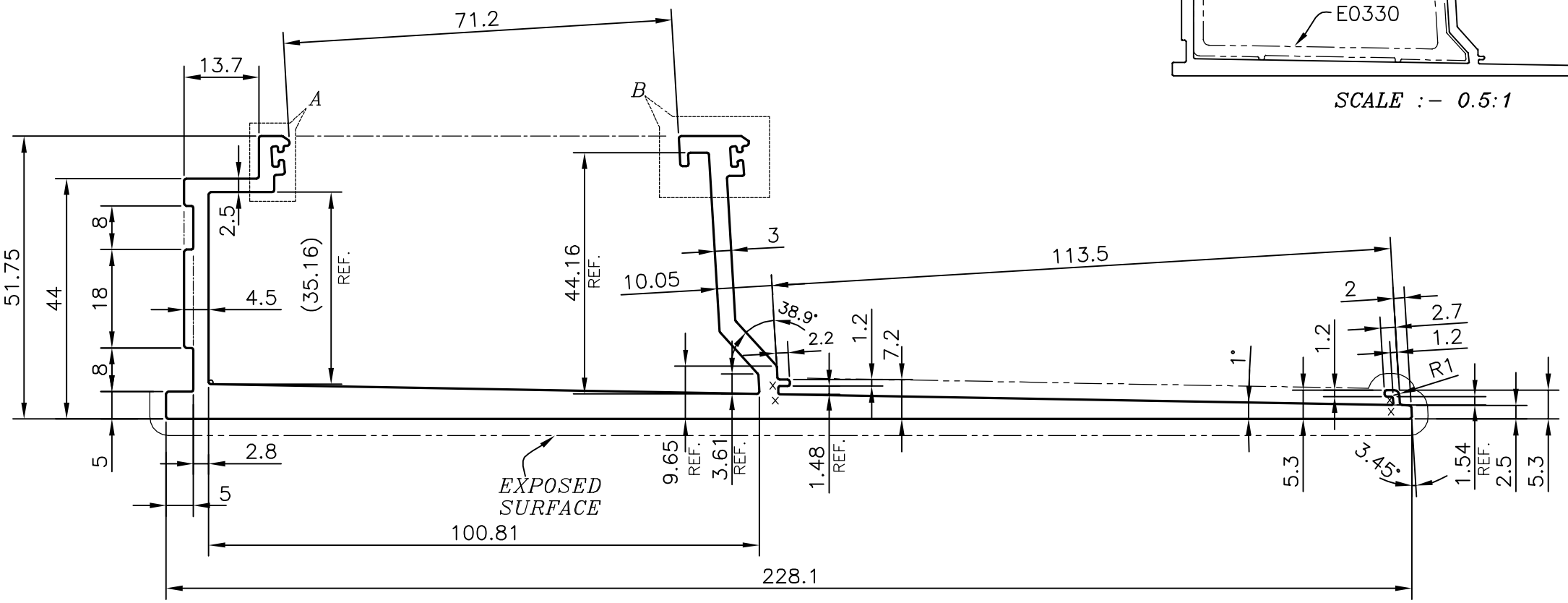

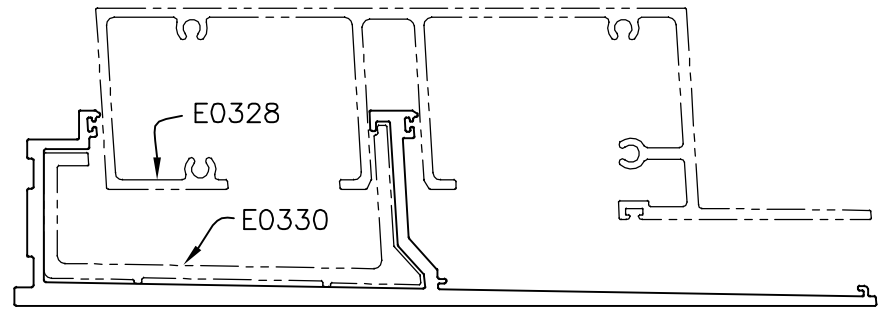

SCALE :– 0.5:1

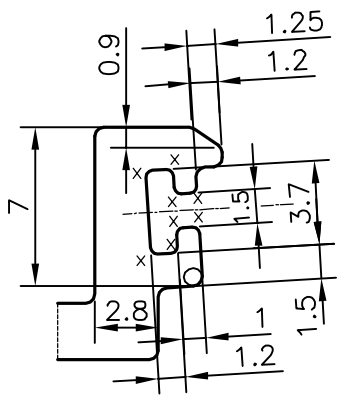

DETAIL OF "A"
SCALE 3:1

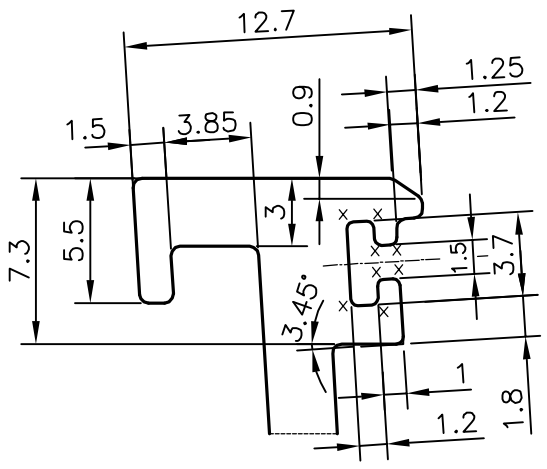

DETAIL OF "B"
SCALE 3:1

X = RADIUS 0.3 mm. (20 PLACES)

ANGULARITY TOLERANCE = ±1°
TRY TO MAINTAIN AS CLOSER ±0.75

TOLERANCES ON OVERALL WIDTHS & WIDTHS ACROSS FLATS OF BARS, & REGULAR SECTIONS			
UPTO 6.40mm – ±0.20 UPTO 10.0mm – ±0.23 UPTO 12.0mm – ±0.25 UPTO 16.0mm – ±0.28 UPTO 25.0mm – ±0.30	UPTO 32.0mm – ±0.38 UPTO 50.0mm – ±0.46 UPTO 60.0mm – ±0.53 UPTO 80.0mm – ±0.69 UPTO 100.0mm – ±0.75	UPTO 120.0mm – ±0.85 UPTO 160.0mm – ±1.02 UPTO 200.0mm – ±1.14 UPTO 250.0mm – ±1.40 UPTO 300.0mm – ±1.65	1. STRAIGHTNESS=1.7mm/M 2. TWIST=1.7mm/M 3. FLATNESS =0.003xWIDTH

JINDAL
SYMBOL OF QUALITY
AN ISO 9001 COMPANY

JINDAL ALUMINIUM LTD.
BANGALORE–560073 (INDIA)

	NAME	DATE
DRAWN	PARVESH	08–06–2015
CHECKED		
APPROVED	B.NATARAJA	17–07–2015

1. ALL DIMENSIONS ARE IN mm.
2. ROUND OFF ALL SHARP CORNERS WITH 0.40 mm.
3. TOLERANCES WILL BE AS PER IS:3965–1981 , UNLESS OTHERWISE SPECIFIED

SCALE	1:1
AREA mm^2	1424.465
PERIMETER mm.	736.391
WEIGHT kg/m	3.846

PARTY'S NAME	ALUFIT (INDIA) PRIVATE LIMITED, BANGALORE
PARTY'S DRAWING No.	AS PER AUTOCAD DRAWING–INT–10
ALLOY & TEMPER	6063 T6
DESCRIPTION	CURTAIN WALL SECTION–SUBCILL (TYP.)

DRAWING No.	SECTION No.
P–14726	–
E0329	E0329