P-14941-1

E0348

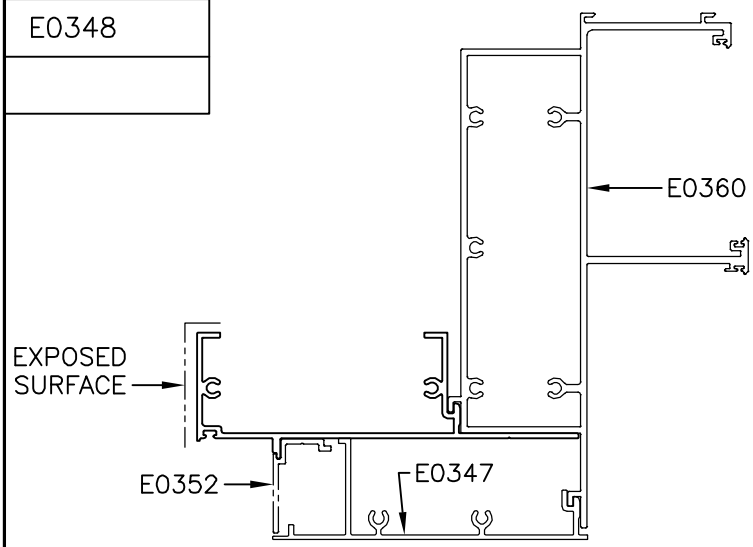

DETAIL"A"
SCALE 3:1

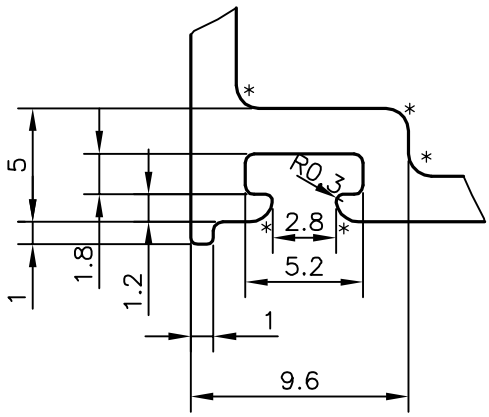

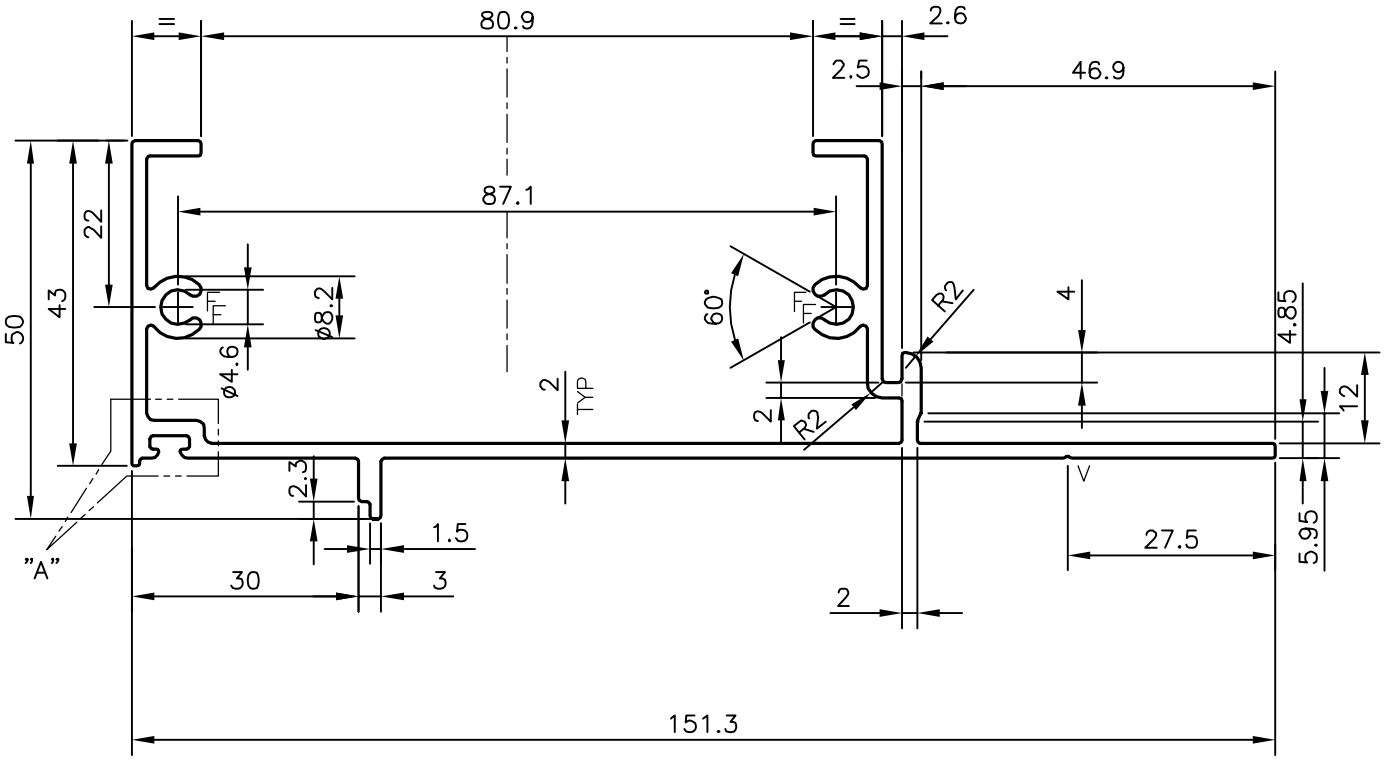

V = V GROOVE 0.5x90°
* = 1.0 RADIUS (5 PLACES)
F = FULL RADIUS (4 PLACES)

			NAME	DATE
SYMBOL OF QUALITY AN ISO 9001 COMPANY	*JINDAL ALUMINIUM LTD.* *BANGALORE-560073 (INDIA)*	DRAWN	J.P.KAUSHIK	06-08-2015
		CHECKED		
		APPROVED	S.S.GARG	12-08-2015

1. ALL DIMENSIONS ARE IN mm.
2. ROUND OFF ALL SHARP CORNERS WITH 0.40 mm.
3. TOLERANCES WILL BE AS PER IS:3965-1981 UNLESS OTHERWISE SPECIFIED

SCALE	1:1
AREA mm^2	603.865
PERIMETER mm.	587.306
WEIGHT kg/m	1.630

PARTY'S NAME	ALUFIT (INDIA) PRIVATE LIMITED, BANGALORE
PARTY'S DRAWING No.	AL-07
ALLOY & TEMPER	6063 T6
DESCRIPTION	CURTAIN WALL SECTION

DRAWING No.	SECTION No.
P-14941-1	–
E0348	E0348