P–14953–1
E0358

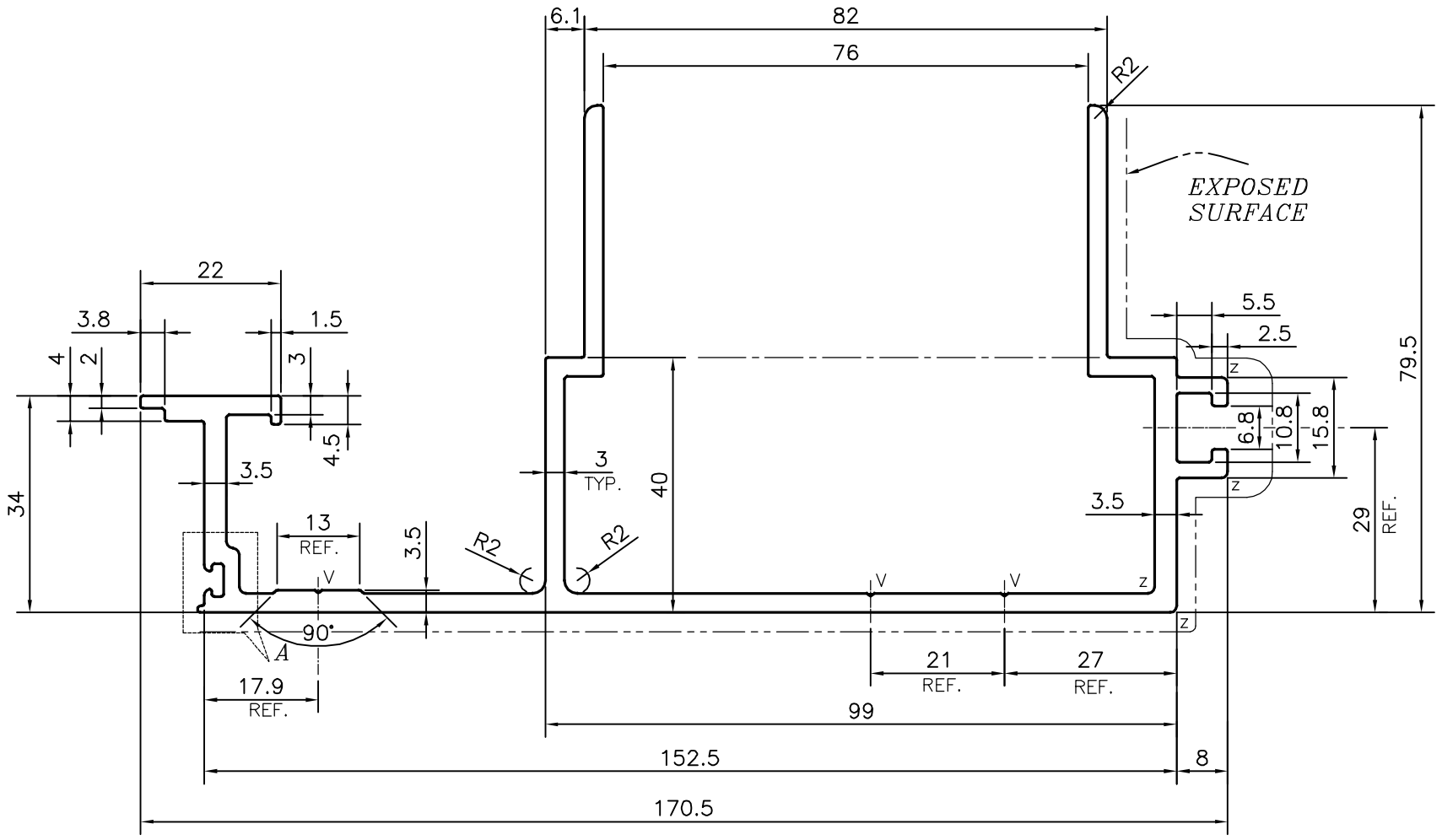

X = RADIUS 0.3 mm. (4 PLACES)
Z = RADIUS 1 mm. (7 PLACES)
V = VEE GROOVE 0.4x90° (3 PLACES)

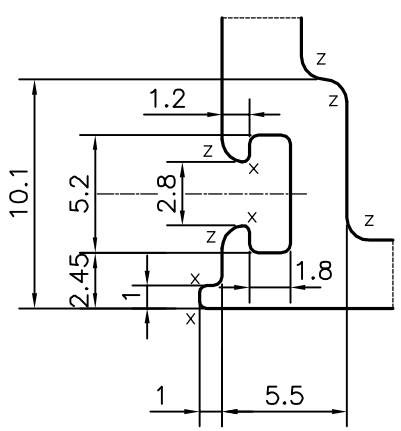

DETAIL OF "A"
SCALE 3:1

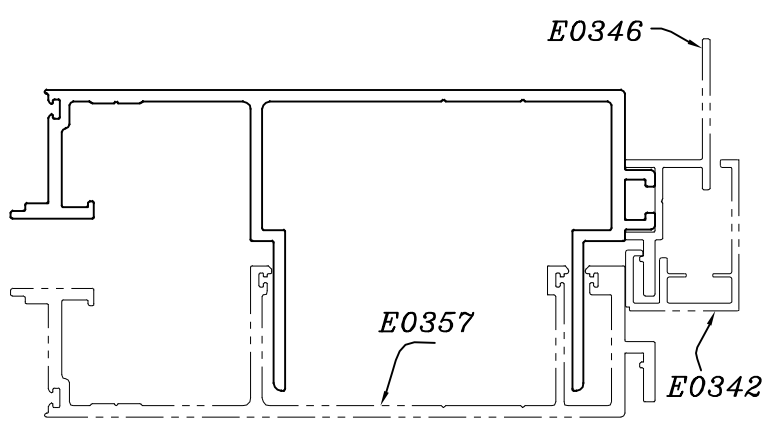

SCALE :– 0.5:1

TOLERANCES ON OVERALL WIDTHS & WIDTHS ACROSS FLATS OF BARS, & REGULAR SECTIONS			
UPTO 6.40mm – ±0.20 UPTO 10.0mm – ±0.23 UPTO 12.0mm – ±0.25 UPTO 16.0mm – ±0.28 UPTO 25.0mm – ±0.30	UPTO 32.0mm – ±0.38 UPTO 50.0mm – ±0.46 UPTO 60.0mm – ±0.53 UPTO 80.0mm – ±0.69 UPTO 100.0mm – ±0.75	UPTO 120.0mm – ±0.85 UPTO 160.0mm – ±1.02 UPTO 200.0mm – ±1.14 UPTO 250.0mm – ±1.40 UPTO 300.0mm – ±1.65	1. STRAIGHTNESS=1.7mm/M 2. TWIST=1.7mm/M 3. ANGULARITY= ±2° 4. FLATNESS =0.007xWIDTH

			NAME	DATE
JINDAL SYMBOL OF QUALITY AN ISO 9001 COMPANY	*JINDAL ALUMINIUM LTD.* *BANGALORE–560073 (INDIA)*	DRAWN	*PARVESH*	10–08–2015
		CHECKED		
		APPROVED	S.S.GARG	12–08–2015
1. ALL DIMENSIONS ARE IN mm. 2. ROUND OFF ALL SHARP CORNERS WITH 0.40 mm. 3. TOLERANCES WILL BE AS PER IS:3965–1981 , UNLESS OTHERWISE SPECIFIED		SCALE		1:1
		AREA mm^2		1210.918
		PERIMETER mm.		792.23
		WEIGHT kg/m		3.269
PARTY'S NAME	ALUFIT (INDIA) PRIVATE LIMITED, BANGALORE	DRAWING No.		SECTION No.
PARTY'S DRAWING No.	AS PER AUTOCAD DRAWING–AL–01	P–14953–1		–
ALLOY & TEMPER	6063 T6	E0358		E0358
DESCRIPTION	CURTAIN WALL SECTION–MALE MULLION			