P−15347
E0417

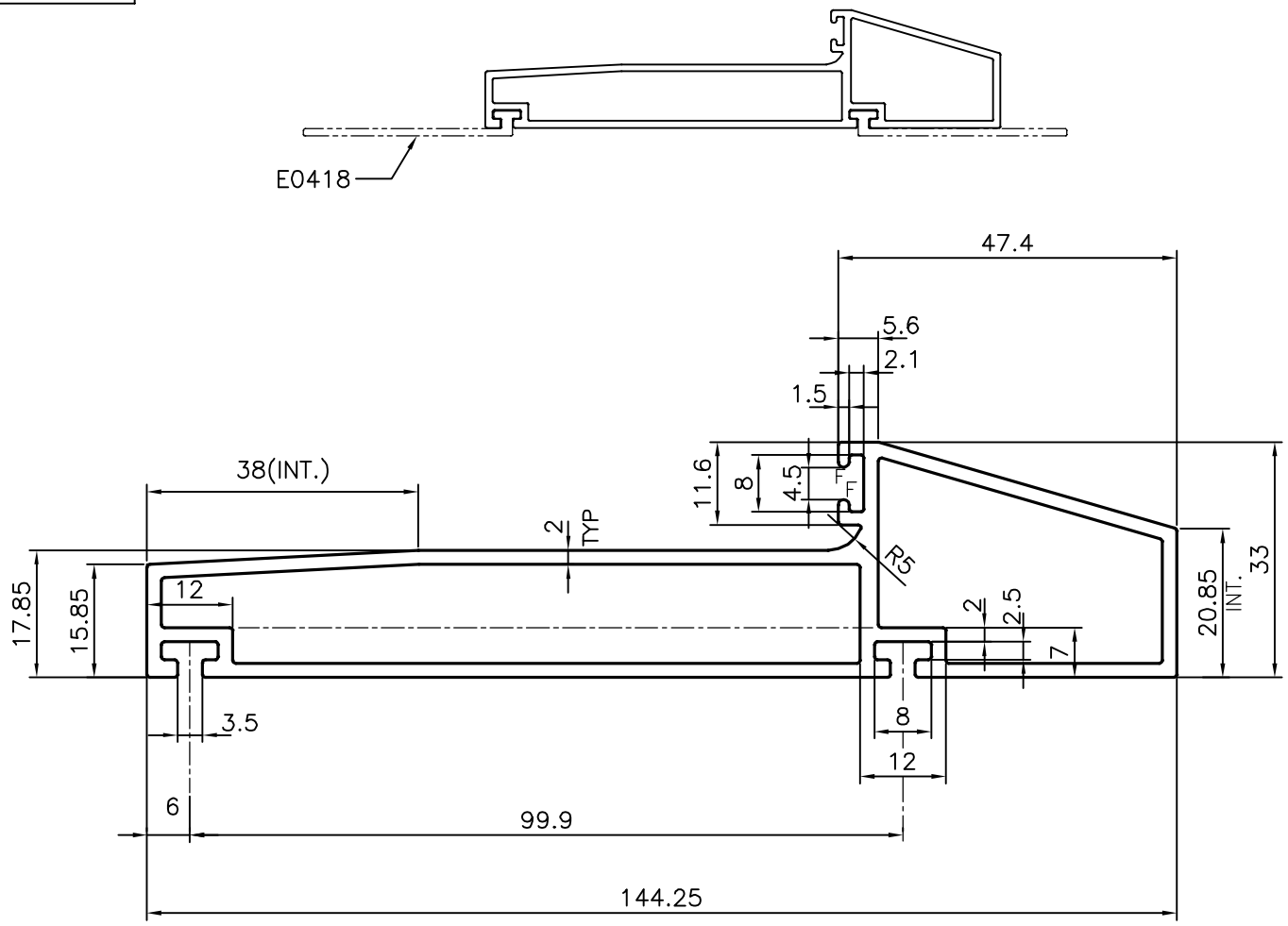

F = FULL RADIUS (2 PLACES)

SYMBOL OF QUALITY AN ISO 9001 COMPANY	*JINDAL ALUMINIUM LTD.* *BANGALORE−560073 (INDIA)*		NAME	DATE
		DRAWN	J.P.KAUSHIK	26−11−2015
		CHECKED		
		APPROVED	S.S.GARG	25−12−2015
1. ALL DIMENSIONS ARE IN mm. 2. ROUND OFF ALL SHARP CORNERS WITH 0.40 mm. 3. TOLERANCES WILL BE AS PER IS:6477−1983 , UNLESS OTHERWISE SPECIFIED		SCALE		1:1
		AREA mm^2		767.153
		PERIMETER mm.		393.127
PARTY'S NAME	ALUFIT (INDIA) PRIVATE LIMITED, BANGALORE	WEIGHT kg/m		2.071
		DRAWING No.		SECTION No.
PARTY'S DRAWING No.	AS PER DRAWING D3	P−15347		−
		E0417		E0417
ALLOY & TEMPER	6063 T6			
DESCRIPTION	DOOR THRESHOLD			