P−15524
E0434

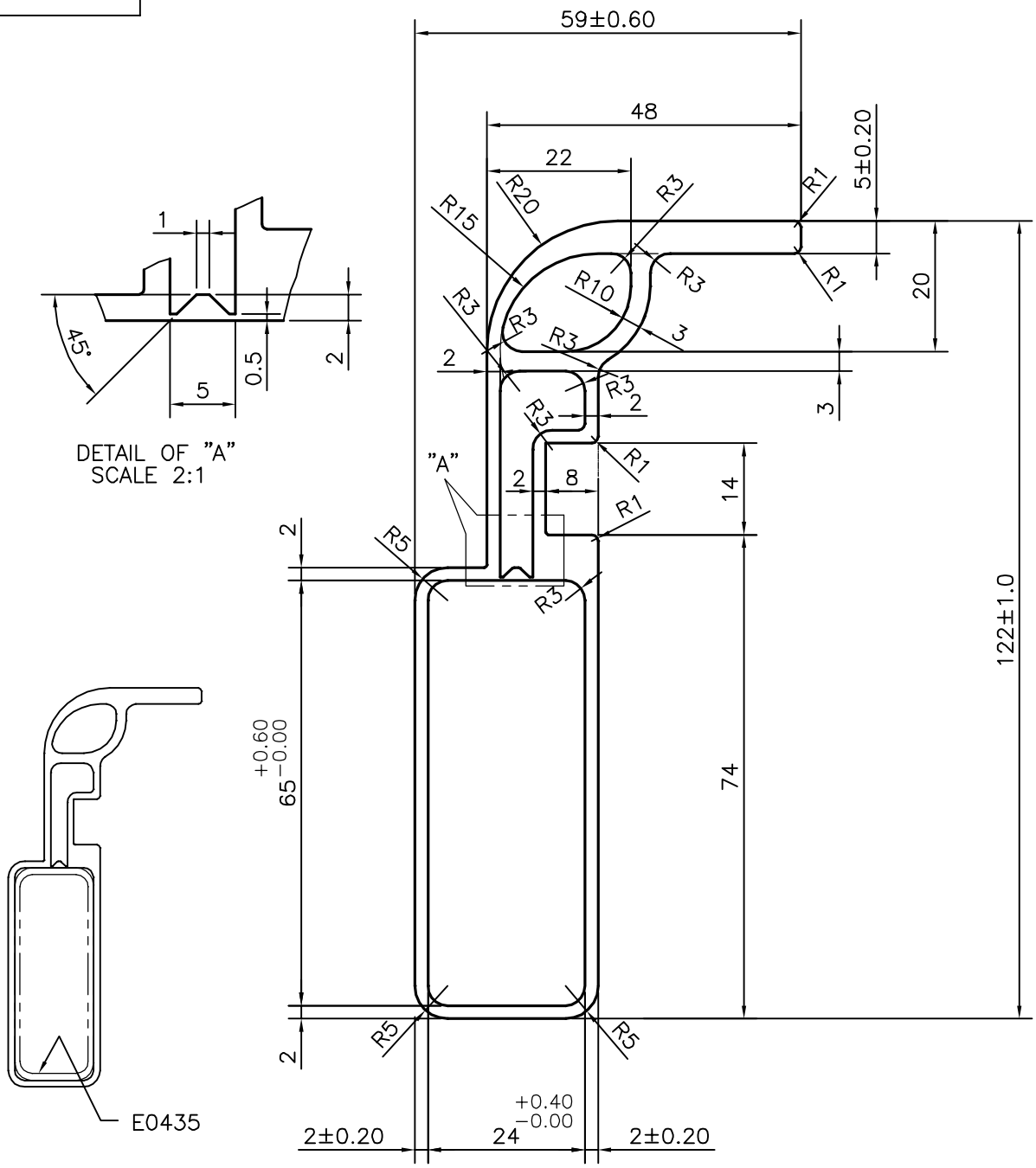

			NAME	DATE
JINDAL SYMBOL OF QUALITY AN ISO 9001 COMPANY	*JINDAL ALUMINIUM LTD.* *BANGALORE−560073 (INDIA)*	DRAWN	J.P.KAUSHIK	01−02−2016
		CHECKED		
		APPROVED		

1. ALL DIMENSIONS ARE IN mm.
2. ROUND OFF ALL SHARP CORNERS WITH 0.40 mm.
3. TOLERANCES WILL BE AS PER, IS:6477−1983 UNLESS OTHERWISE SPECIFIED

SCALE	1:1
AREA mm^2	883.709
PERIMETER mm.	354.529
WEIGHT kg/m	2.386

PARTY'S NAME	AGUERRI INDUSTRIES PVT. LTD., CHENNAI
PARTY'S DRAWING No.	04656
ALLOY & TEMPER	6063 T5
DESCRIPTION	SOPORTE SUPERIOR/UPPER SUPPORT 122x59

DRAWING No.	SECTION No.
P−15524	−
E0434	E0434