P−15598
E0436

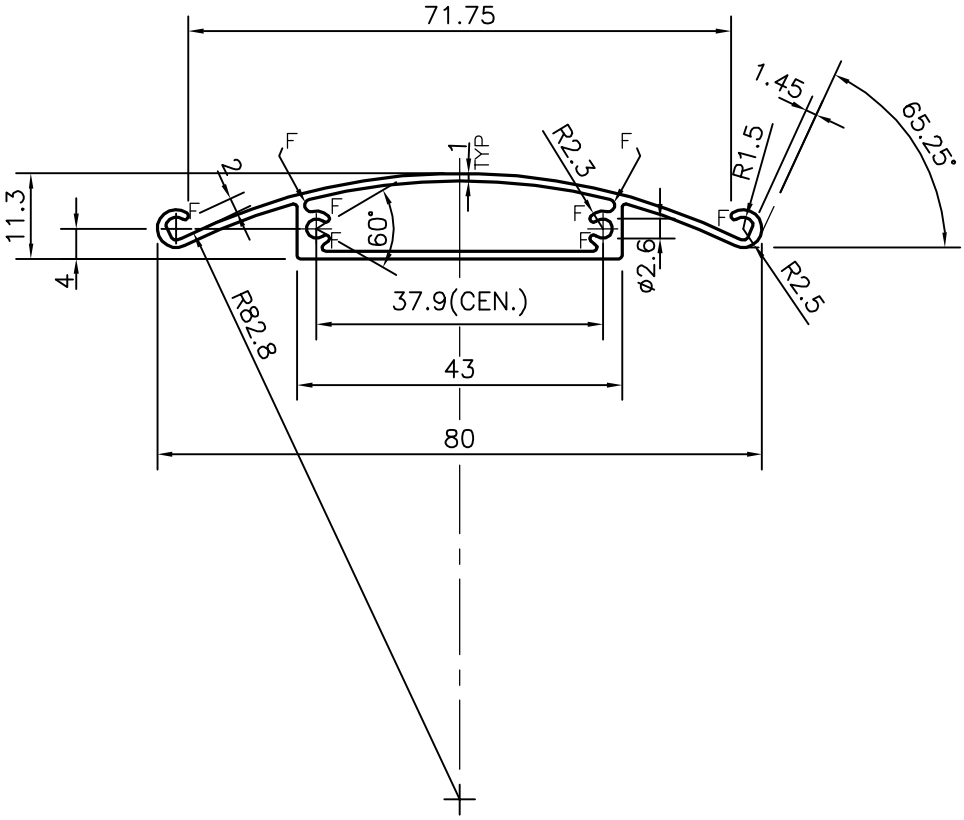

F = FULL RADIUS (8 PLACES)

SYMBOL OF QUALITY AN ISO 9001 COMPANY	*JINDAL ALUMINIUM LTD.* *BANGALORE−560073 (INDIA)*		NAME	DATE
		DRAWN	J.P.KAUSHIK	13−02−2016
		CHECKED		
		APPROVED	B. NATARAJ	17−02−2016
1. ALL DIMENSIONS ARE IN mm. 2. ROUND OFF ALL SHARP CORNERS WITH 0.40 mm. 3. TOLERANCES WILL BE AS PER IS:6477−1983 UNLESS OTHERWISE SPECIFIED		SCALE		1:1
		AREA mm^2		170.748
		PERIMETER mm.		201.328
		WEIGHT kg/m		0.461
PARTY'S NAME	SIGNSUTRA, NEW DELHI	DRAWING No.		SECTION No.
PARTY'S DRAWING No.	AS PER DRAWING	P−15598		−
ALLOY & TEMPER	6063 T5	E0436		E0436
DESCRIPTION	DISPLAY SECTION			