P−15596−1
E0437

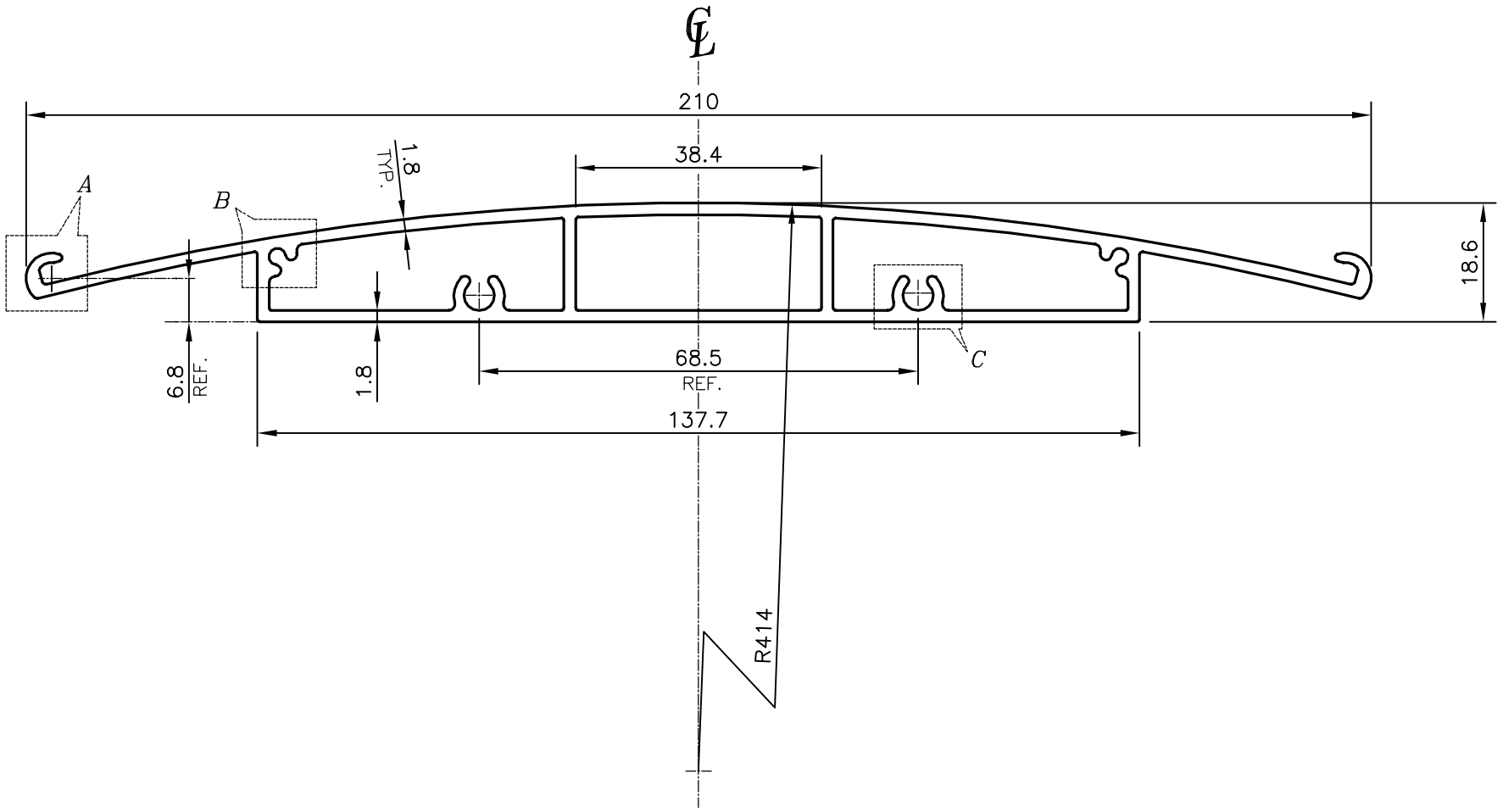

F = FULL RADIUS (10 PLACES)
Z = RADIUS 1 mm. (8 PLACES)

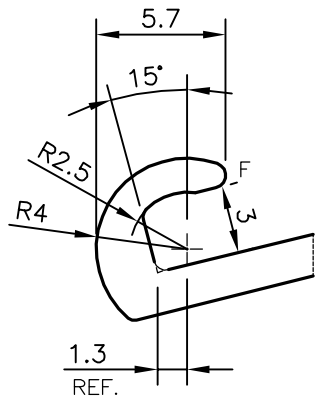

DETAIL OF "A"
SCALE 3:1

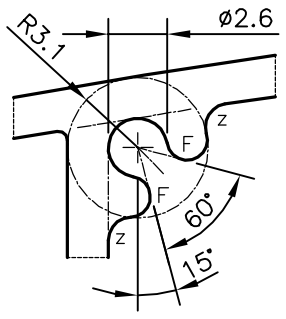

DETAIL OF "B"
SCALE 3:1

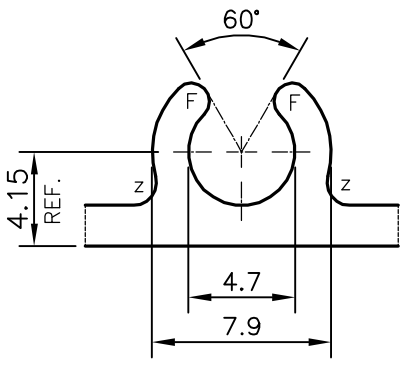

DETAIL OF "C"
SCALE 3:1

JINDAL SYMBOL OF QUALITY AN ISO 9001 COMPANY	*JINDAL ALUMINIUM LTD.* *BANGALORE−560073 (INDIA)*		NAME	DATE
		DRAWN	PARVESH	23−02−2016
		CHECKED		
		APPROVED	B. NATARAJ	22−02−2016
1. ALL DIMENSIONS ARE IN mm. 2. ROUND OFF ALL SHARP CORNERS WITH 0.40 mm. 3. TOLERANCES WILL BE AS PER IS:6477−1983 UNLESS OTHERWISE SPECIFIED		SCALE		1:1
		AREA mm^2		796.481
		PERIMETER mm.		473.778
		WEIGHT kg/m		2.150
PARTY'S NAME	SIGNSUTRA, NEW DELHI	DRAWING No.		SECTION No.
PARTY'S DRAWING No.	AS PER SAMPLE	P−15596−1		−
ALLOY & TEMPER	6063 T5	E0437		E0437
DESCRIPTION	DISPLAY SECTION			