P-9780-1	
X1256	
E0451	

EXPOSED SURFACE

1:1

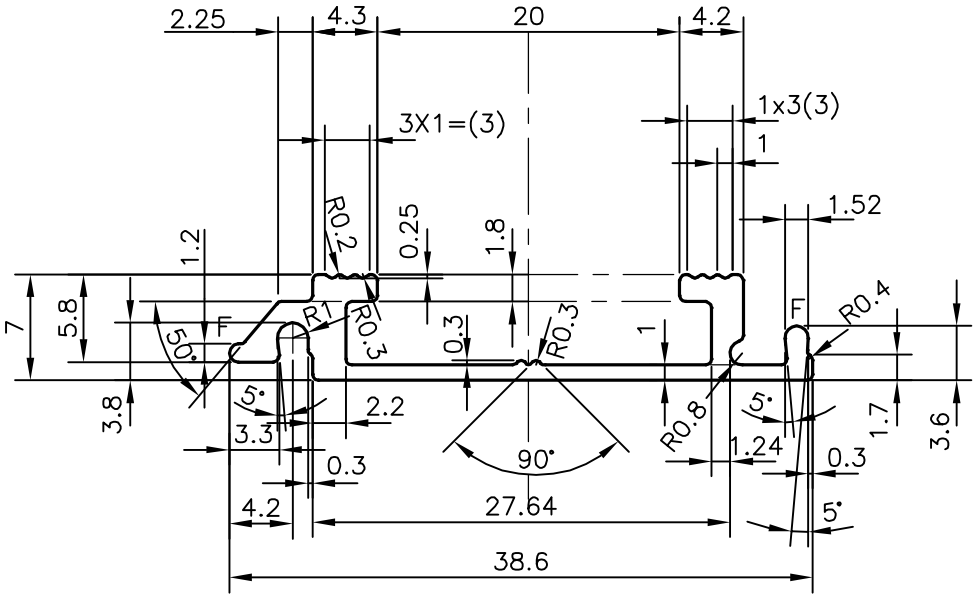

F= FULL RADIUS (4 PLACES)

			NAME	DATE
JINDAL SYMBOL OF QUALITY AN ISO 9001 COMPANY	*JINDAL ALUMINIUM LTD.* *BANGALORE-560073 (INDIA)*	DRAWN	J.P.KAUSHIK	18-02-2010
		CHECKED		
		APPROVED	S.S.GARG	25-02-2010

1. ALL DIMENSIONS ARE IN mm.
2. ROUND OFF ALL SHARP CORNERS WITH 0.40 mm.
3. TOLERANCES WILL BE AS PER IS:3965-1981, UNLESS OTHERWISE SPECIFIED

SCALE	2:1
AREA mm^2	79.677
PERIMETER mm.	117.874
WEIGHT kg/m	0.215

		DRAWING No.	SECTION No.
PARTY'S NAME	SURFACES, BANGALORE		
PARTY'S DRAWING No.	AS PER SAMPLE	P-9780-1	–
ALLOY & TEMPER	HE9 WP	X1256	X1256
DESCRIPTION	MISC. SECTION	E0451	E0451