P−15780
E0478

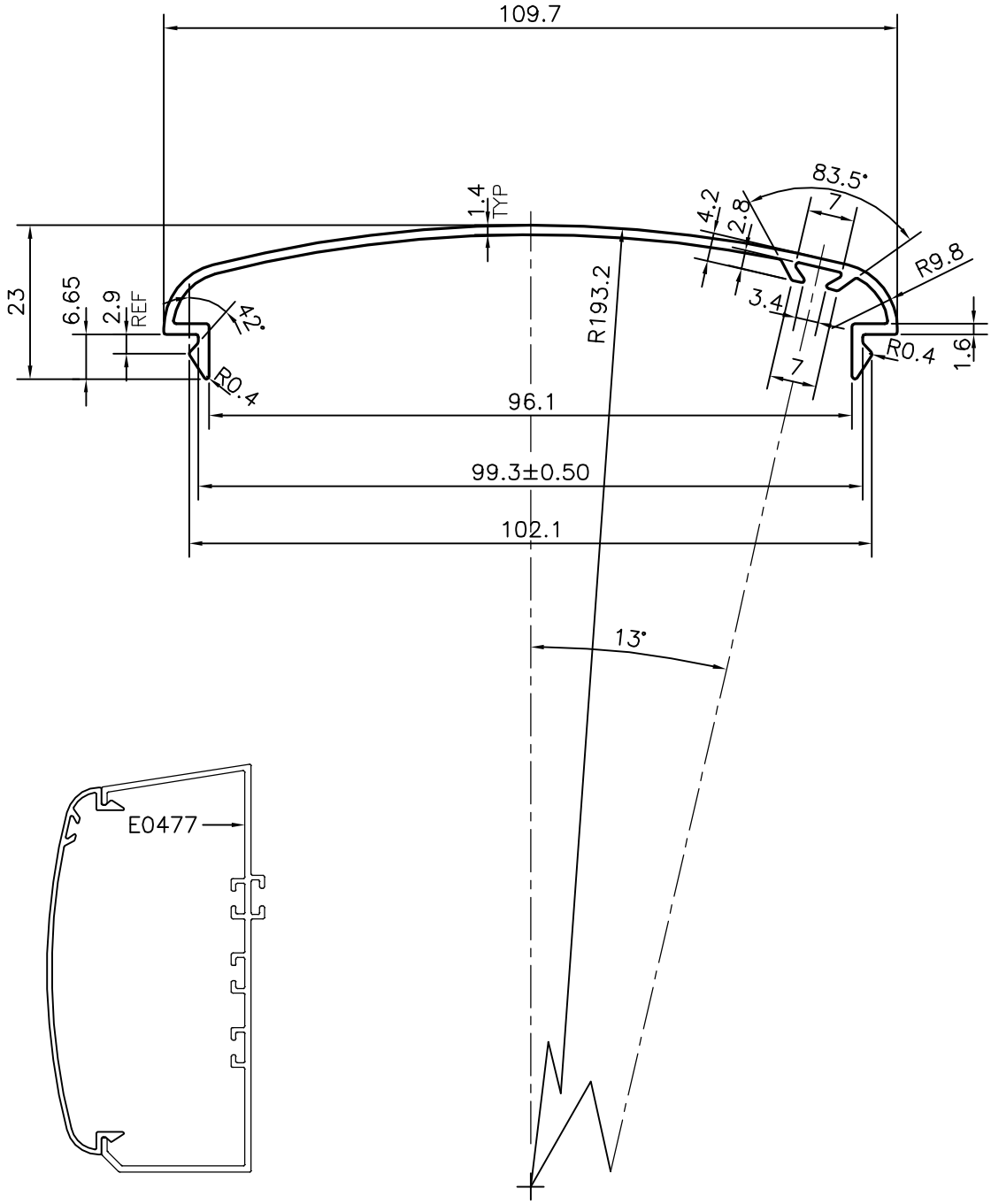

			NAME	DATE
JINDAL SYMBOL OF QUALITY AN ISO 9001 COMPANY	*JINDAL ALUMINIUM LTD.* *BANGALORE−560073 (INDIA)*	DRAWN	J.P.KAUSHIK	20−04−2016
		CHECKED		
		APPROVED	B. NATARAJ	09−05−2016

1. ALL DIMENSIONS ARE IN mm.
2. ROUND OFF ALL SHARP CORNERS WITH 0.40 mm.
3. TOLERANCES WILL BE AS PER, IS:3965−1981 UNLESS OTHERWISE SPECIFIED

SCALE	1:1
AREA mm^2	224.583
PERIMETER mm.	304.727
WEIGHT kg/m	0.606

PARTY'S NAME	DRAEGER MEDICAL INDIA PVT. LTD., MUMBAI
PARTY'S DRAWING No.	AS PER AutoCAD DRAWING
ALLOY & TEMPER	6060 T6
DESCRIPTION	MISC. SECTION

DRAWING No.	SECTION No.
P−15780	−
E0478	E0478