P–15471
E0480

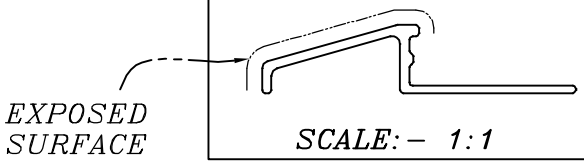

SCALE:– 1:1

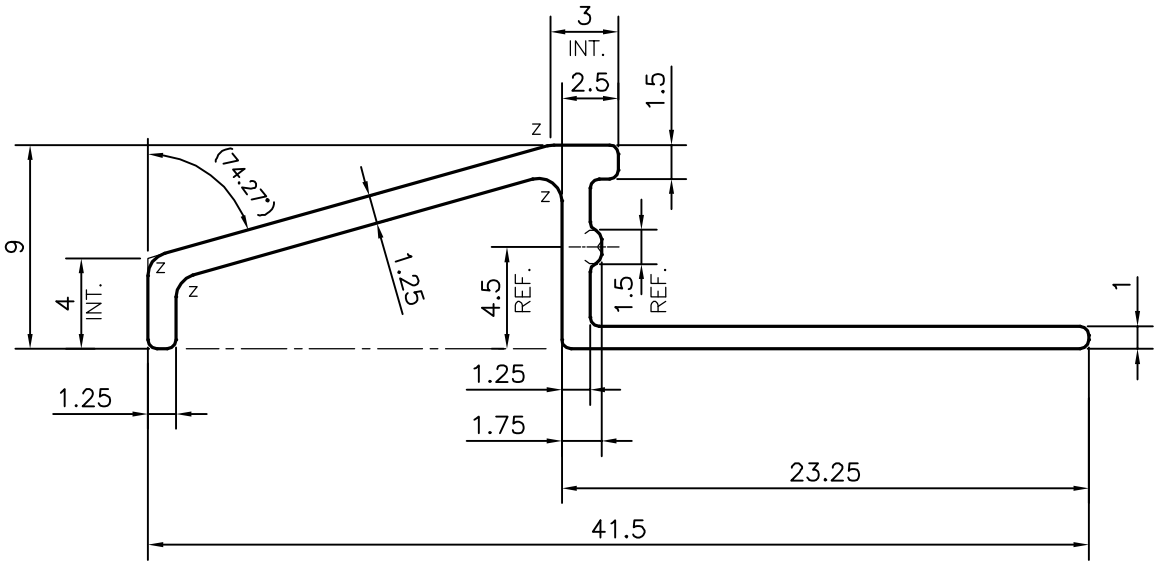

Z = RADIUS 1 mm. (4 PLACES)

JINDAL SYMBOL OF QUALITY AN ISO 9001 COMPANY	*JINDAL ALUMINIUM LTD.* *BANGALORE–560073 (INDIA)*		NAME	DATE
		DRAWN	*PARVESH*	01–01–2016
		CHECKED		
		APPROVED	S.S. GARG	07–06–2016

1. ALL DIMENSIONS ARE IN mm.
2. ROUND OFF ALL SHARP CORNERS WITH 0.40 mm.
3. TOLERANCES WILL BE AS PER IS:3965–1981 , UNLESS OTHERWISE SPECIFIED

SCALE	3:1
AREA mm^2	63.333
PERIMETER mm.	108.384
WEIGHT kg/m	0.171

PARTY'S NAME	SURFACES, BANGALORE
PARTY'S DRAWING No.	MODIFIED OF SECTION No. E0305
ALLOY & TEMPER	HE9 WP
DESCRIPTION	FURNITURE SECTION

DRAWING No.	SECTION No.
P–15471	–
E0480	E0480