P−15495
E0485

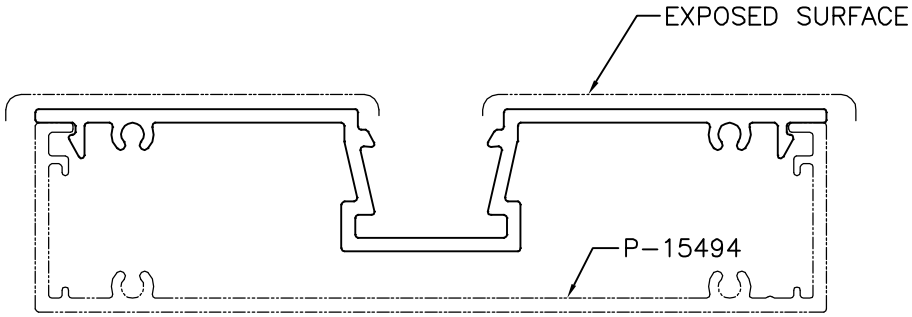

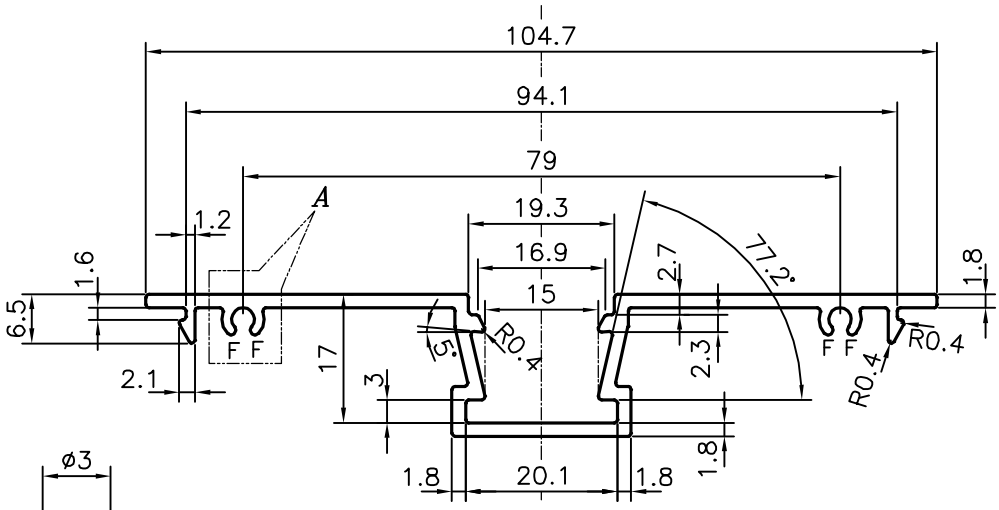

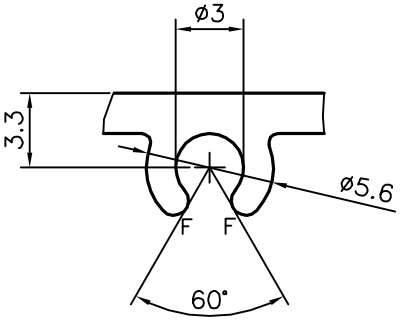

DETAIL OF "A"
SCALE 3:1

F =FULL RADIUS (4 PLACES)

JINDAL SYMBOL OF QUALITY AN ISO 9002 COMPANY	*JINDAL ALUMINIUM LTD.* *BANGALORE−560073 (INDIA)*		NAME / DATE
		DRAWN	J.P.KAUSHIK / 11−01−2016
		CHECKED	
		APPROVED	S.S. GARG / 09−06−2016
1. ALL DIMENSIONS ARE IN mm. 2. ROUND OFF ALL SHARP CORNERS WITH 0.40 mm. 3. TOLERANCES WILL BE AS PER IS:3965−1981 UNLESS OTHERWISE SPECIFIED		SCALE	1:1
		AREA mm^2	301.675
		PERIMETER mm.	338.632
PARTY'S NAME	H.V.ART N GLASS PVT. LTD., DELHI	WEIGHT kg/m	0.815
		DRAWING No.	SECTION No.
PARTY'S DRAWING No.	AS PER DRAWING	P−15495	−
ALLOY & TEMPER	6063 T6	E0485	E0485
DESCRIPTION	GLAZING CLIP SECTION		