P-15498
E0487

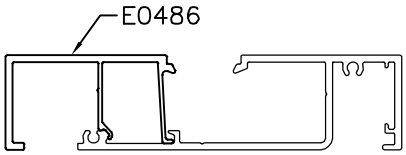

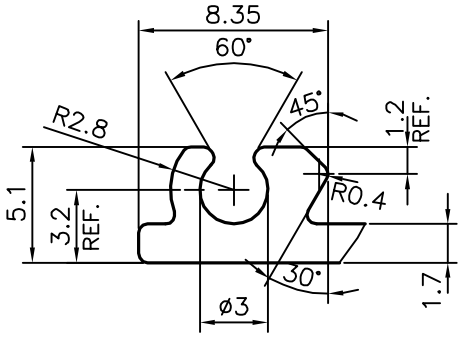

DETAIL OF "B"
SCALE 3:1

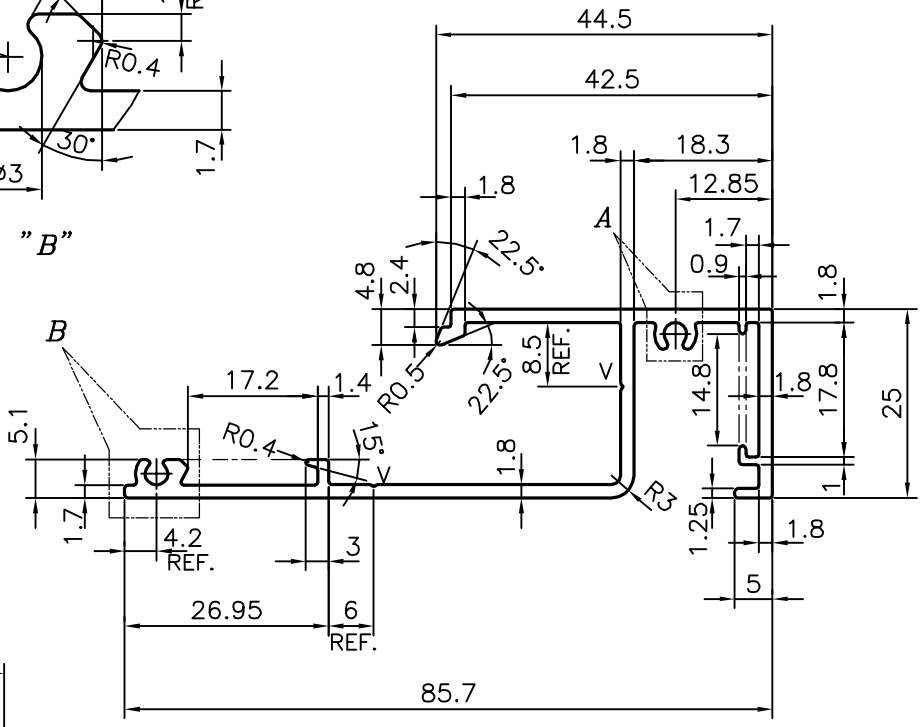

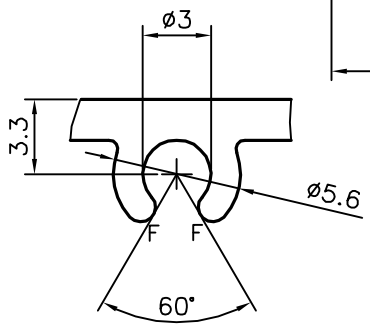

DETAIL OF "A"
SCALE 3:1

JINDAL SYMBOL OF QUALITY AN ISO 9002 COMPANY	*JINDAL ALUMINIUM LTD.* *BANGALORE-560073 (INDIA)*		NAME	DATE
		DRAWN	J.P.KAUSHIK	11-01-2016
		CHECKED		
		APPROVED	S.S. GARG	09-06-2016
1. ALL DIMENSIONS ARE IN mm. 2. ROUND OFF ALL SHARP CORNERS WITH 0.40 mm. 3. TOLERANCES WILL BE AS PER IS:3965-1981 UNLESS OTHERWISE SPECIFIED		SCALE		1:1
		AREA mm^2		319.642
		PERIMETER mm.		367.253
		WEIGHT kg/m		0.863
PARTY'S NAME	H.V.ART N GLASS PVT. LTD., DELHI	DRAWING No.		SECTION No.
PARTY'S DRAWING No.	AS PER DRAWING	P-15498		–
ALLOY & TEMPER	6063 T6	E0487		E0487
DESCRIPTION	MISC. SECTION			