P–13101
X1699
21669
E0490

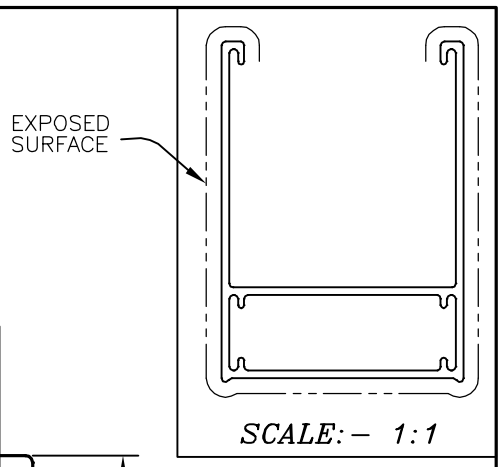

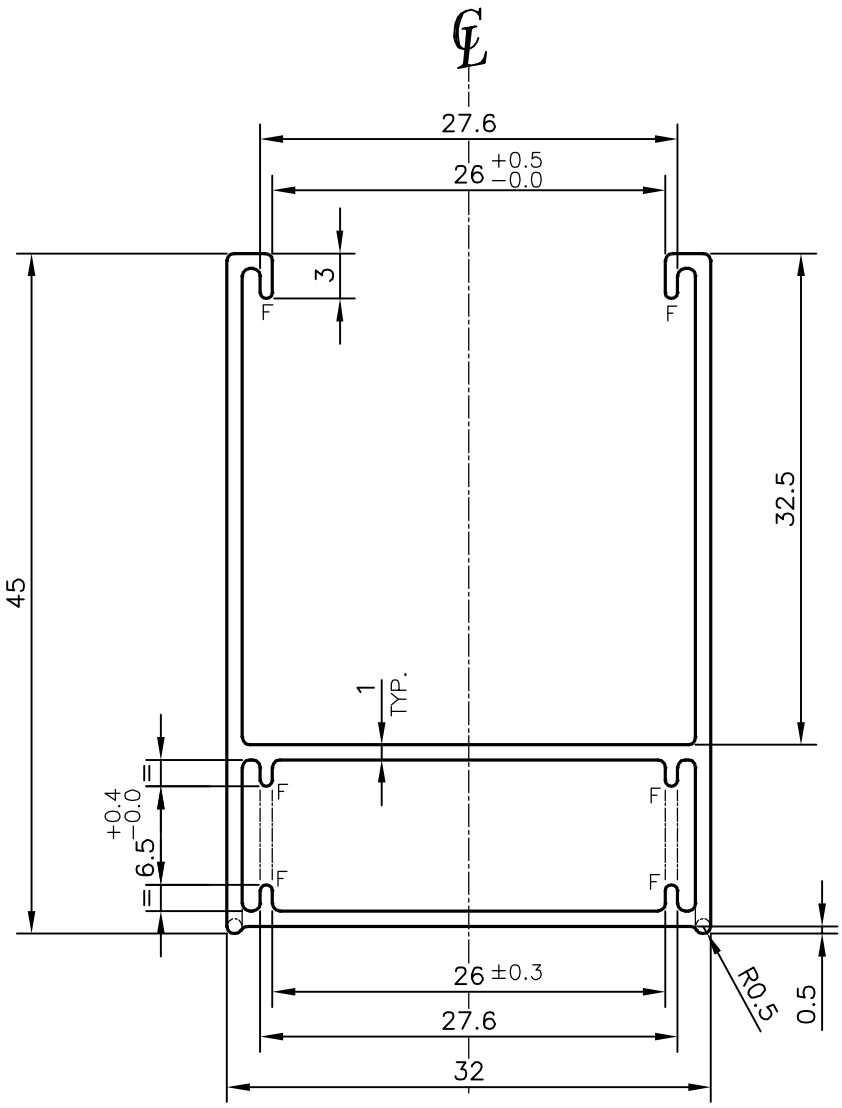

☞ *SECTION SHOULD MATCH WITH PLASTIC COMPONENT*

F = FULL RADIUS (6 PLACES)

1. STRAIGHTNESS=1.7mm/M
2. TWIST=1.7mm/M
3. ANGULARITY= ±2°
4. FLATNESS =0.007xWIDTH

TOLERANCE CHART CD = CIRCUMSCRIBING CIRCLE

DIMENSION	CD≤100	100<CD≤200	200<CD≤300	300<CD≤500
UPTO 10mm	±0.25	±0.30	±0.35	±0.40
10.0 –25.0	±0.30	±0.40	±0.50	±0.60
25.0 –50.0	±0.50	±0.60	±0.80	±0.90
50.0 –100	±0.70	±0.90	±1.10	±1.30
100 – 150	–	±1.10	±1.30	±1.50
150 – 200	–	±1.3	±1.50	±1.80
200 – 300	–	–	±1.70	±2.10
300 – 450	–	–	–	±2.80

JINDAL
SYMBOL OF QUALITY
AN ISO 9001 COMPANY

JINDAL ALUMINIUM LTD.

BANGALORE–560073 (INDIA)

	NAME	DATE
DRAWN	*PARVESH*	18–10–2013
CHECKED		
APPROVED	S.S.GARG	07–11–2013

1. ALL DIMENSIONS ARE IN mm.
2. ROUND OFF ALL SHARP CORNERS WITH 0.50 mm.
3. TOLERANCES WILL BE AS PER BS:EN–755–9 , UNLESS OTHERWISE SPECIFIED

SCALE	2:1
AREA mm^2	162.965
PERIMETER mm.	232.100
WEIGHT kg/m	0.440

PARTY'S NAME	AWESOME DESIGNS, NEW DELHI
PARTY'S DRAWING No.	0006
ALLOY & TEMPER	HE9 WP
DESCRIPTION	WINDOW SECTION–B2 TOP RAIL

DRAWING No.	SECTION No.
P–13101	–
X1699	X1699
21669	21669
E0490	E0490