P–13105
X1703
21673
E0494

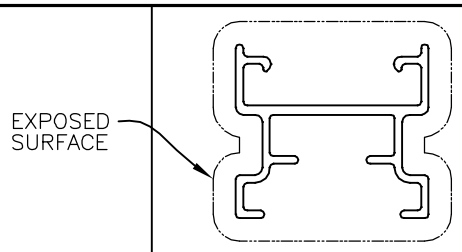

SCALE:– 1:1

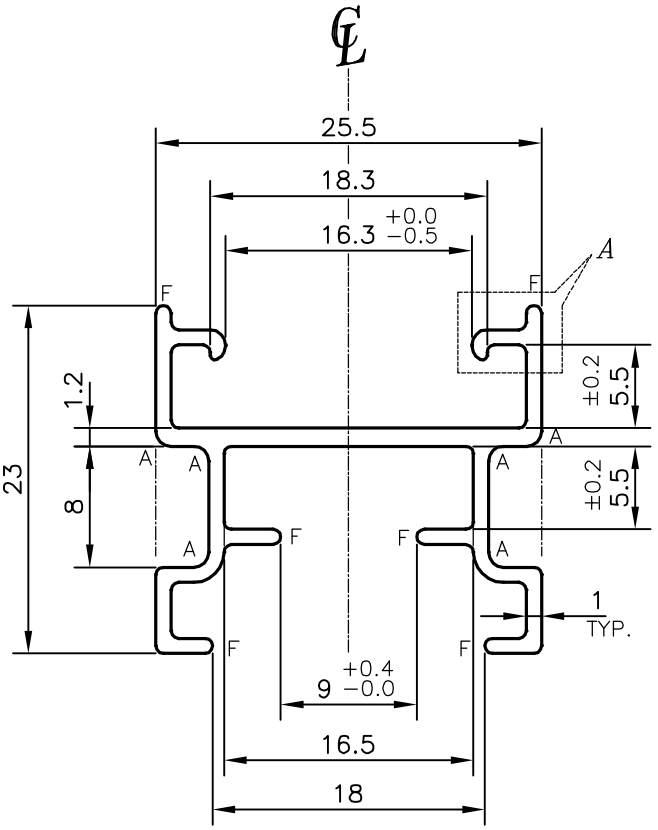

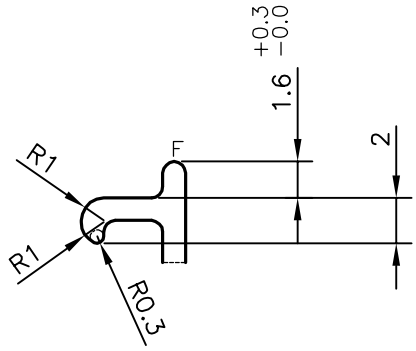

DETAIL OF "A"
SCALE 3:1

☞ SECTION SHOULD MATCH WITH PLASTIC COMPONENT

F = FULL RADIUS (6 PLACES)
A = RADIUS 1 mm. (6 PLACES)

1. STRAIGHTNESS=1.7mm/M
2. TWIST=1.7mm/M
3. ANGULARITY= ±2°
4. FLATNESS =0.007xWIDTH

TOLERANCE CHART CD = CIRCUMSCRIBING CIRCLE

DIMENSION	CD≤100	100<CD≤200	200<CD≤300	300<CD≤500
UPTO 10mm	±0.25	±0.30	±0.35	±0.40
10.0 –25.0	±0.30	±0.40	±0.50	±0.60
25.0 –50.0	±0.50	±0.60	±0.80	±0.90
50.0 –100	±0.70	±0.90	±1.10	±1.30
100 – 150	–	±1.10	±1.30	±1.50
150 – 200	–	±1.3	±1.50	±1.80
200 – 300	–	–	±1.70	±2.10
300 – 450	–	–	–	±2.80

SYMBOL OF QUALITY
AN ISO 9001 COMPANY

JINDAL ALUMINIUM LTD.

BANGALORE–560073 (INDIA)

	NAME	DATE
DRAWN	PARVESH	18–10–2013
CHECKED		
APPROVED	S.S.GARG	07–11–2013

1. ALL DIMENSIONS ARE IN mm.
2. ROUND OFF ALL SHARP CORNERS WITH 0.50 mm.
3. TOLERANCES WILL BE AS PER BS:EN–755–9 , UNLESS OTHERWISE SPECIFIED

SCALE	2:1
AREA mm^2	101.424
PERIMETER mm.	185.552
WEIGHT kg/m	0.274

PARTY'S NAME	AWESOME DESIGNS, NEW DELHI
PARTY'S DRAWING No.	0001
ALLOY & TEMPER	HE9 WP
DESCRIPTION	WINDOW SECTION–B SMALL FIX RAIL

DRAWING No.	SECTION No.
P–13105	–
X1703	X1703
21673	21673
E0494	E0494