P-16218-1

E0532

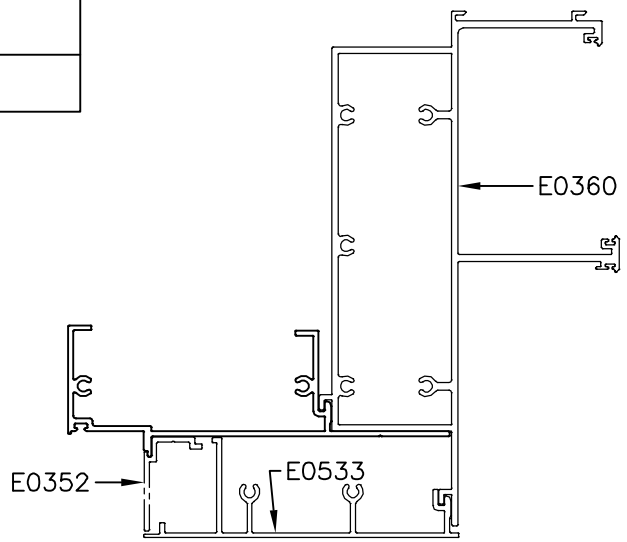

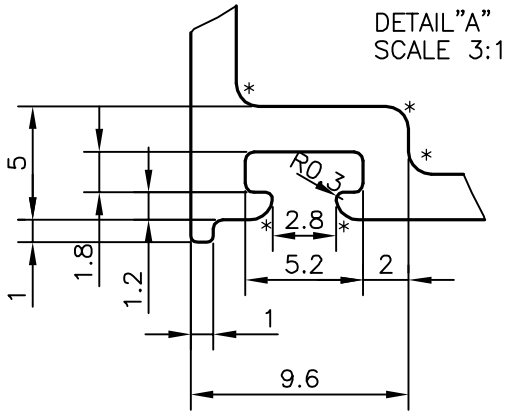

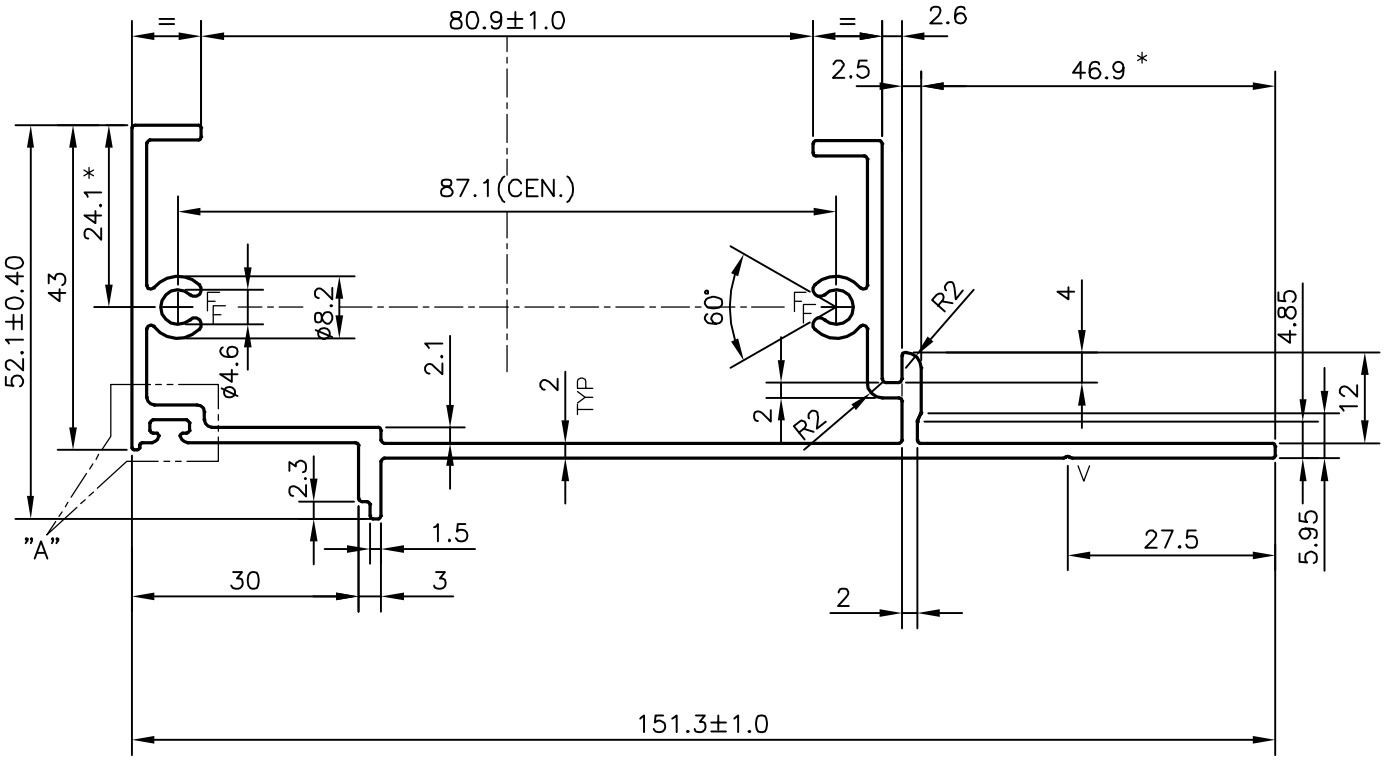

1. STRAIGHTNESS=1.0mm/M
2. TWIST=1.0mm/M
3. ANGULARITY= ±1°
4. FLATNESS =0.006xWIDTH

* = MARKED CRITICAL DIMENSION

V = V GROOVE 0.5x90°

* = 1.0 RADIUS (5 PLACES)

F = FULL RADIUS (4 PLACES)

SYMBOL OF QUALITY
AN ISO 9001 COMPANY

JINDAL ALUMINIUM LTD.

BANGALORE-560073 (INDIA)

	NAME	DATE
DRAWN	J.P.KAUSHIK	19-08-2016
CHECKED		
APPROVED	S.S. GARG	17-09-2016

1. ALL DIMENSIONS ARE IN mm.
2. ROUND OFF ALL SHARP CORNERS WITH 0.40 mm.
3. TOLERANCES WILL BE AS PER IS:3965-1981 UNLESS OTHERWISE SPECIFIED

SCALE	1:1
AREA mm^2	610.165
PERIMETER mm.	590.457
WEIGHT kg/m	1.647

PARTY'S NAME	ALUFIT (INDIA) PRIVATE LIMITED, BANGALORE
PARTY'S DRAWING No.	AL-07
ALLOY & TEMPER	6063 T6
DESCRIPTION	CURTAIN WALL SECTION

DRAWING No.	SECTION No.
P-16218-1	–
E0532	E0532