P−16279−1
E0537

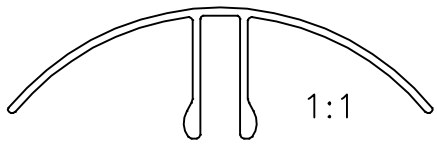

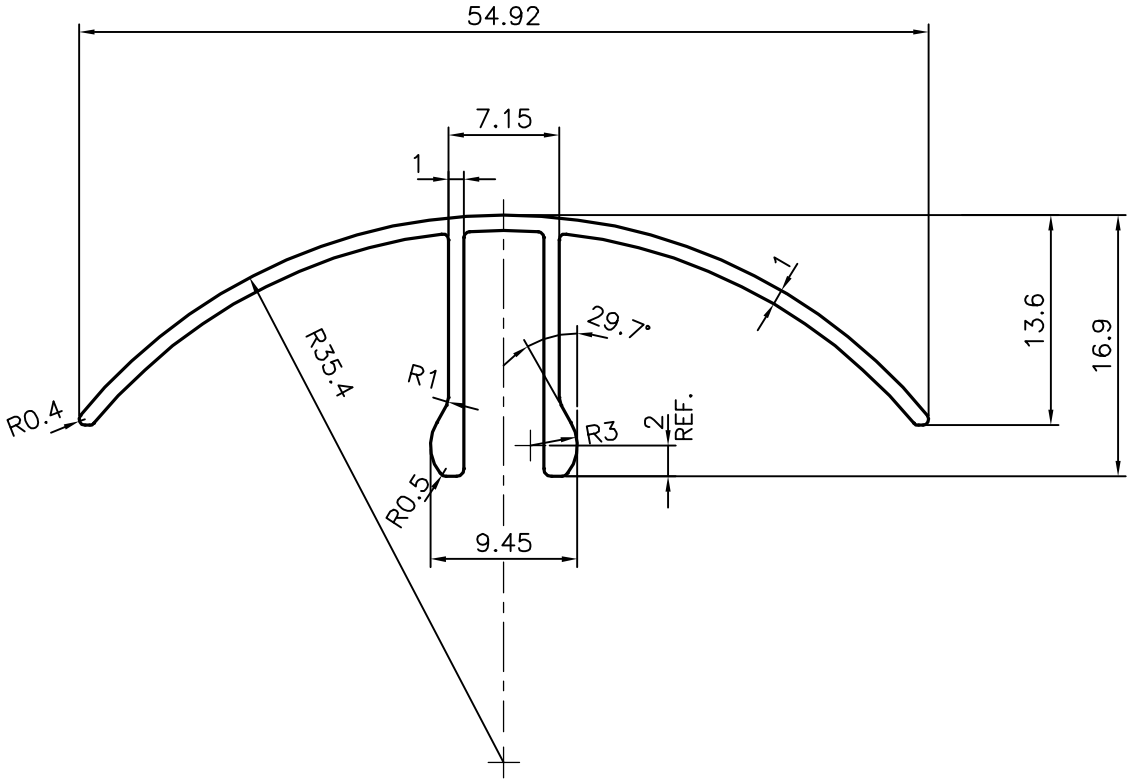

JINDAL SYMBOL OF QUALITY AN ISO 9001 COMPANY	*JINDAL ALUMINIUM LTD.* *BANGALORE−560073 (INDIA)*		NAME	DATE
		DRAWN	J.P.KAUSHIK	31−08−2016
		CHECKED		
		APPROVED	S.S. GARG	20−09−2016

1. ALL DIMENSIONS ARE IN mm.
2. ROUND OFF ALL SHARP CORNERS WITH 0.40 mm.
3. TOLERANCES WILL BE AS PER IS:3965−1981 UNLESS OTHERWISE SPECIFIED

SCALE	2:1
AREA mm^2	101.467
PERIMETER mm.	189.535
WEIGHT kg/m	0.274

PARTY'S NAME	DHANASHREE SOLAR ENTERPRISES LLP, MUMBAI
PARTY'S DRAWING No.	AS PER AutoCAD DRAWING−DSEL−008
ALLOY & TEMPER	6063 T6
DESCRIPTION	SOLAR SECTION

DRAWING No.	SECTION No.
P−16279−1	−
E0537	E0537