P−16540	
E0566	

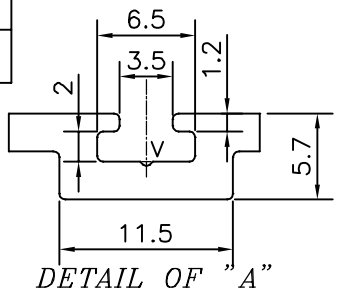

DETAIL OF "A"
SCALE 2:1

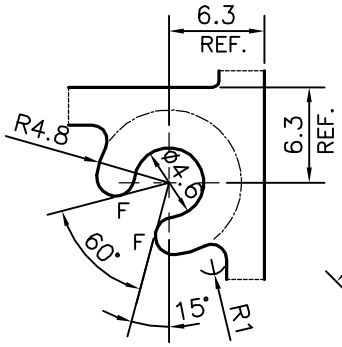

DETAIL OF "B"
SCALE 2:1

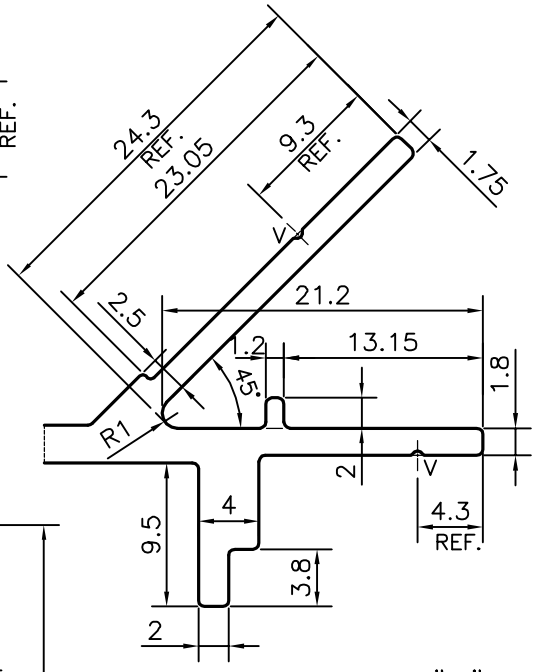

DETAIL OF "C"
SCALE 2:1

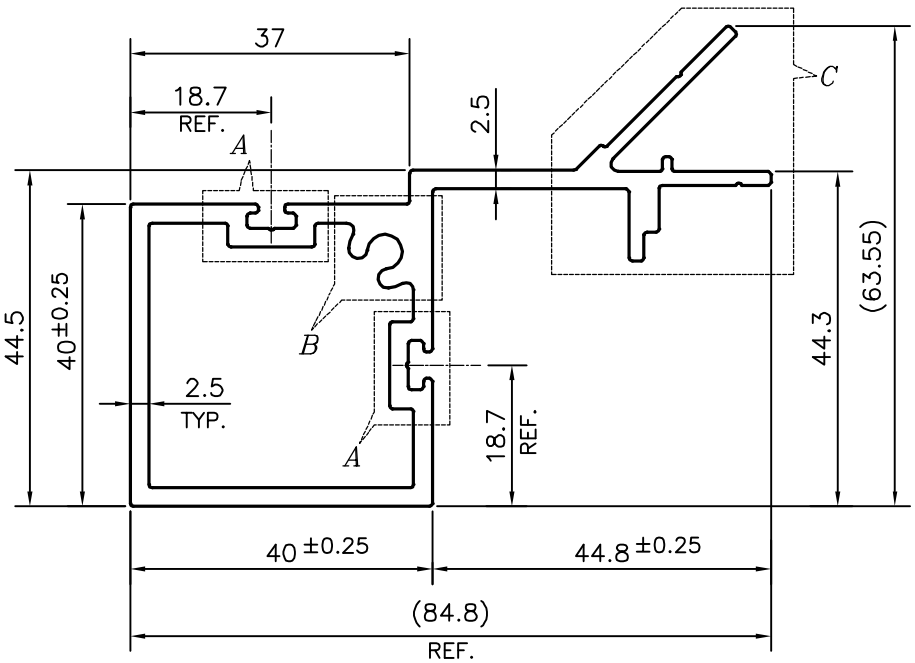

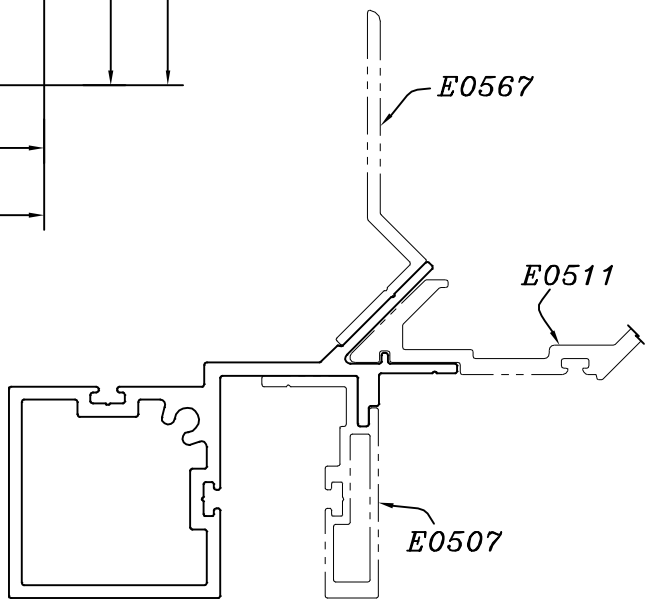

SCALE :− 0.7:1

X = RADIUS 0.3 mm. (2 PLACES)
F = FULL RADIUS (2 PLACES)
V = VEE GROOVE 0.3x90° (4 PLACES)

1. **STRAIGHTNESS=1.0mm/M**
2. **TWIST=1.0mm/M**
3. **ANGULARITY= ±1°**
4. **FLATNESS =0.007xWIDTH**

UNSPECIFIED CORNERS RADIUS WILL BE 0.40 mm.

JINDAL SYMBOL OF QUALITY AN ISO 9001 COMPANY	*JINDAL ALUMINIUM LTD.* *BANGALORE−560073 (INDIA)*		NAME	DATE
		DRAWN	*PARVESH*	22−11−2016
		CHECKED		
		APPROVED	B. NATARAJA	10−12−2016

1. ALL DIMENSIONS ARE IN mm.
2. ROUND OFF ALL SHARP CORNERS WITH 0.50 mm.
3. TOLERANCES WILL BE AS PER IS:6477−1983 , UNLESS OTHERWISE SPECIFIED

SCALE	1:1
AREA mm^2	649.565
PERIMETER mm.	350.973
WEIGHT kg/m	1.754

PARTY'S NAME	ALUFIT (INDIA) PRIVATE LIMITED, BANGALORE
PARTY'S DRAWING No.	MODIFIED OF SECTION No.:−E0510
ALLOY & TEMPER	6063 T6
DESCRIPTION	CURTAIN WALL SECTION−MALE MULLION

DRAWING No.	SECTION No.
P−16540	−
E0566	E0566