P–16884
E0602

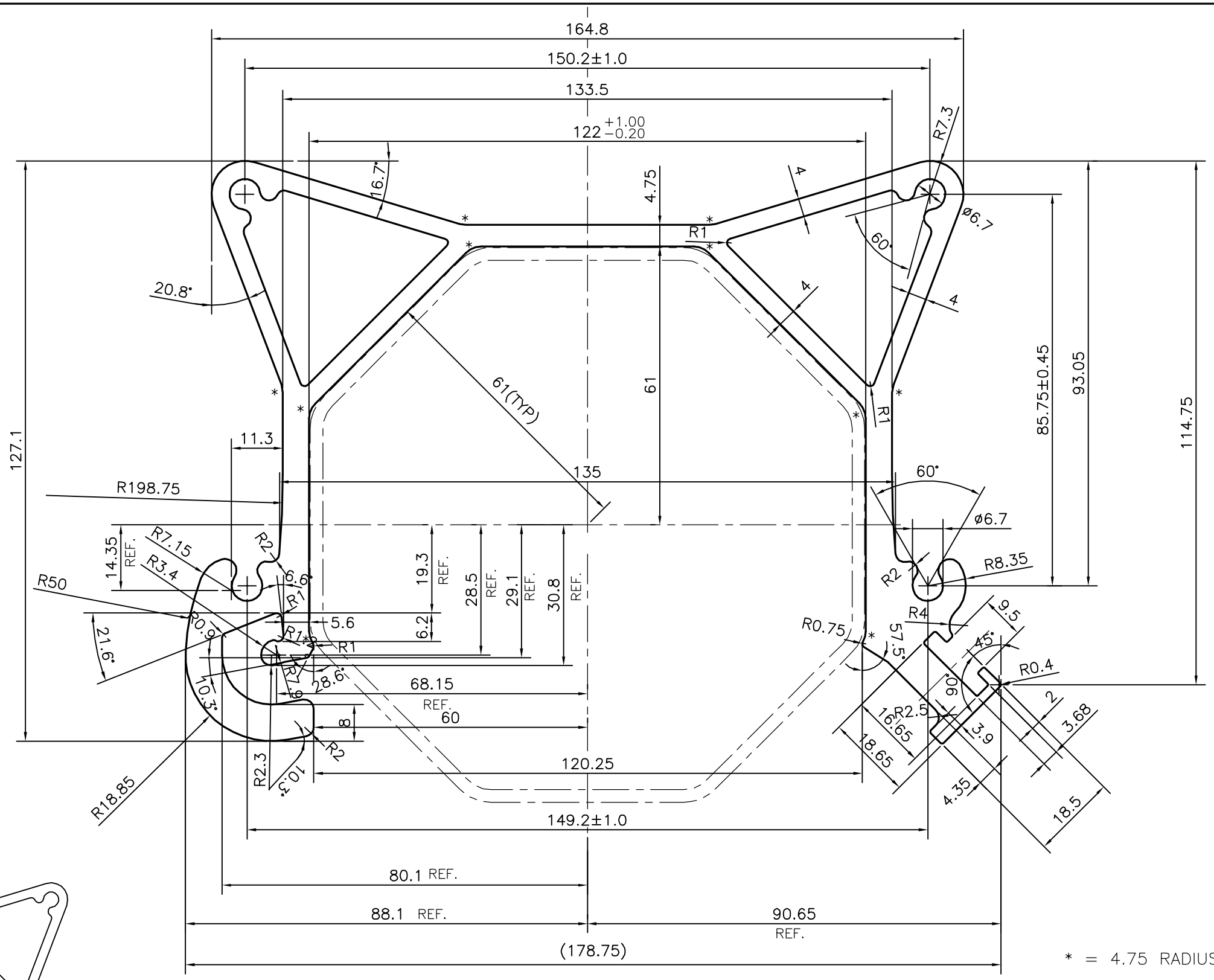

* = 4.75 RADIUS (10 PLACES)

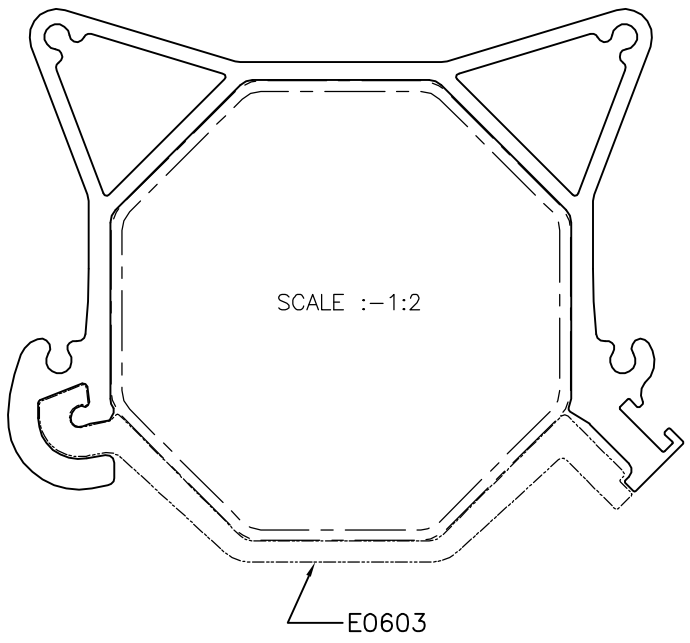

JINDAL SYMBOL OF QUALITY AN ISO 9001 COMPANY	*JINDAL ALUMINIUM LTD.* *BANGALORE–560073 (INDIA)*		NAME	DATE
		DRAWN	J.P.KAUSHIK	14–03–2017
		CHECKED		
		APPROVED	B.NATARAJ	16–03–2017
1. ALL DIMENSIONS ARE IN mm. 2. ROUND OFF ALL SHARP CORNERS WITH 0.40 mm. 3. TOLERANCES WILL BE AS PER IS:6477–1983 UNLESS OTHERWISE SPECIFIED		SCALE		1:1
		AREA mm^2		3179.941
		PERIMETER mm.		901.404
		WEIGHT kg/m		8.586
PARTY'S NAME	ULTRA ENGINEERS, PUNE	DRAWING No.		SECTION No.
PARTY'S DRAWING No.	AS PER AutoCAD DRAWING	P–16884		–
ALLOY & TEMPER	6063 T6	E0602		E0602
DESCRIPTION	MISC. SECTION			