P−16887−1
E0609

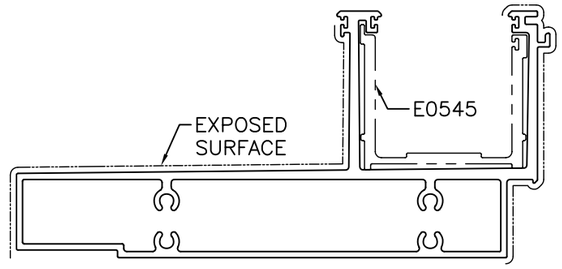

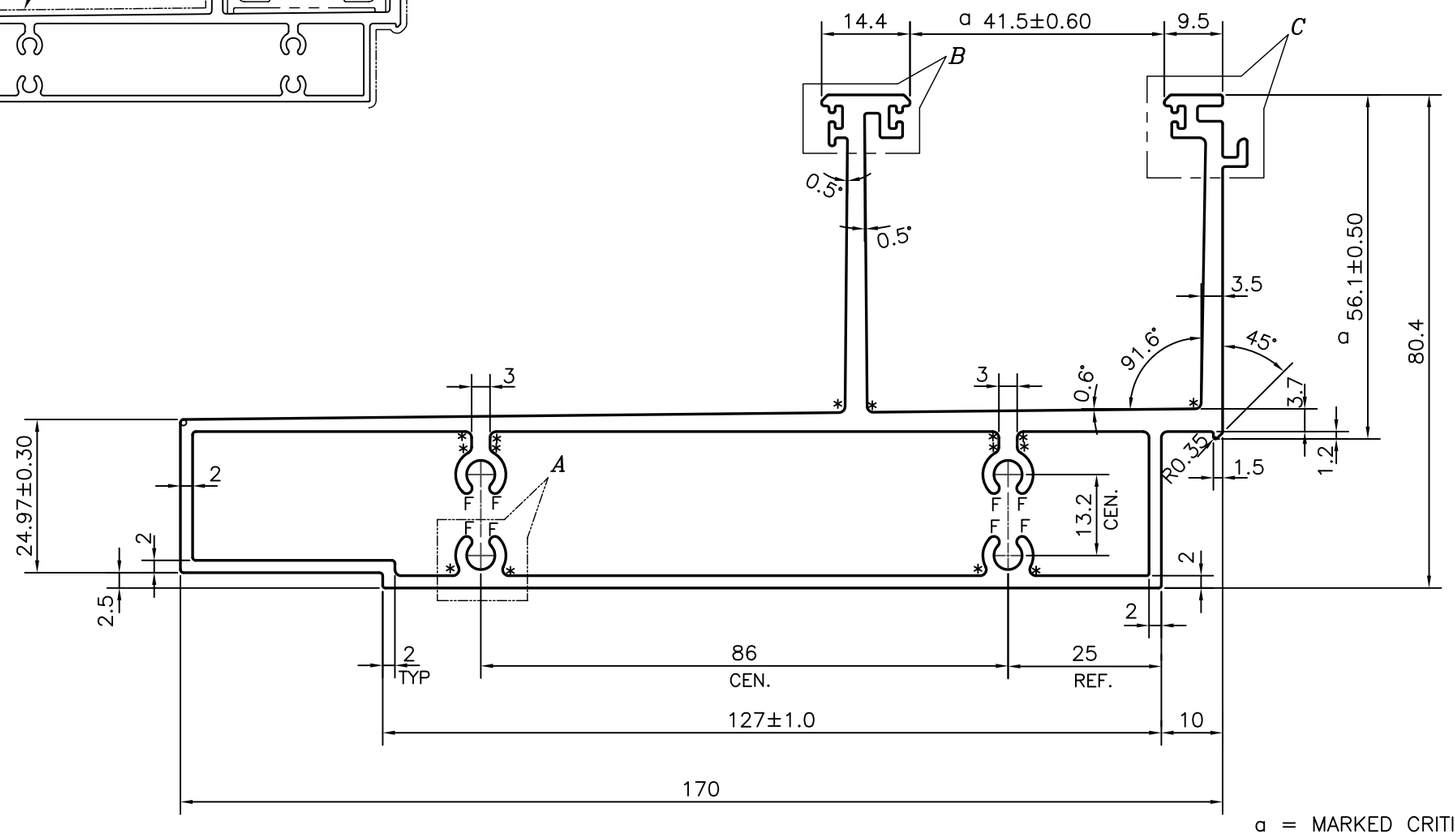

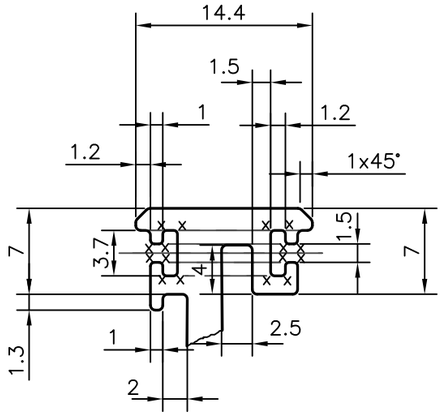

DETAIL OF "B"
SCALE 2:1

a = MARKED CRITICAL DIMENSIONS
X = RADIUS 0.3 mm. (24 PLACES)
F = FULL RADIUS (8 PLACES)
* = RADIUS 1.0 (16 PLACES)

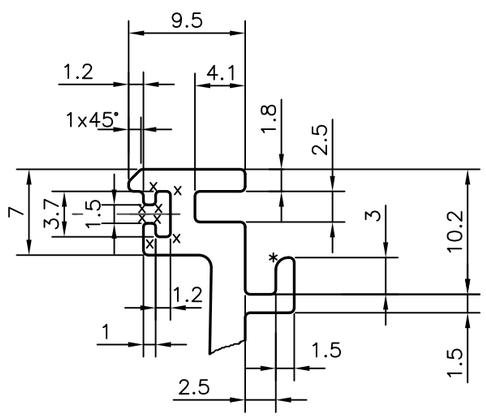

DETAIL OF "C"
SCALE 2:1

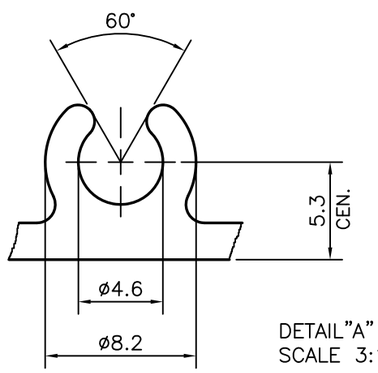

DETAIL"A"
SCALE 3:1

TOLERANCES ON OVERALL DIMENSIONS OF HOLLOW SECTIONS

UPTO 20.0mm − ±0.30	UPTO 80.0mm − ±0.70	UPTO 180.0mm − ±1.27
UPTO 30.0mm − ±0.38	UPTO 100.0mm − ±0.80	UPTO 200.0mm − ±1.40
UPTO 40.0mm − ±0.45	UPTO 120.0mm − ±0.90	UPTO 225.0mm − ±1.52
UPTO 50.0mm − ±0.52	UPTO 140.0mm − ±1.00	
UPTO 60.0mm − ±0.60	UPTO 160.0mm − ±1.14	

1. **STRAIGHTNESS=1.0mm/M**
2. **TWIST=1.0mm/M**
3. **ANGULARITY= ±1°**
4. **FLATNESS =0.007xWIDTH**

JINDAL
SYMBOL OF QUALITY
AN ISO 9001 COMPANY

JINDAL ALUMINIUM LTD.
BANGALORE−560073 (INDIA)

	NAME	DATE
DRAWN	J.P.KAUSHIK	16−03−2017
CHECKED		
APPROVED	B.NATARAJ	22−03−2017

1. ALL DIMENSIONS ARE IN mm.
2. ROUND OFF ALL SHARP CORNERS WITH 0.40 mm.
3. TOLERANCES WILL BE AS PER IS:6477−1983 UNLESS OTHERWISE SPECIFIED

SCALE	1:1
AREA mm^2	1440.211
PERIMETER mm.	685.642
WEIGHT kg/m	3.889

PARTY'S NAME	ALUFIT (INDIA) PVT. LTD., BANGALORE
PARTY'S DRAWING No.	SL−01 & AutoCAD DRAWING
ALLOY & TEMPER	6063 T6
DESCRIPTION	MID TRANSOM SECTION

DRAWING No.	SECTION No.
P−16887−1	−
E0609	E0609