P–16732–1
E0647

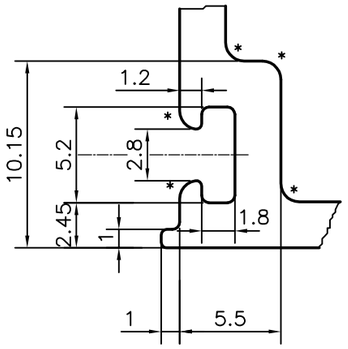

DETAIL OF "D"
SCALE 3:1

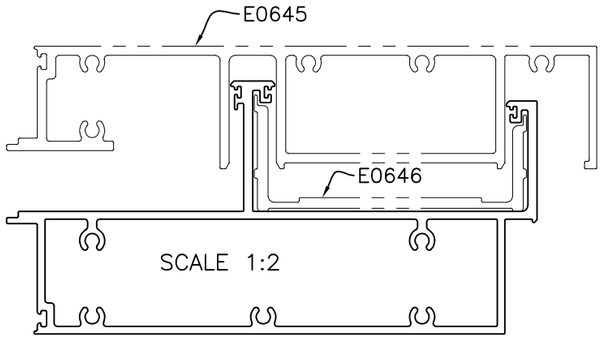

SCALE 1:2

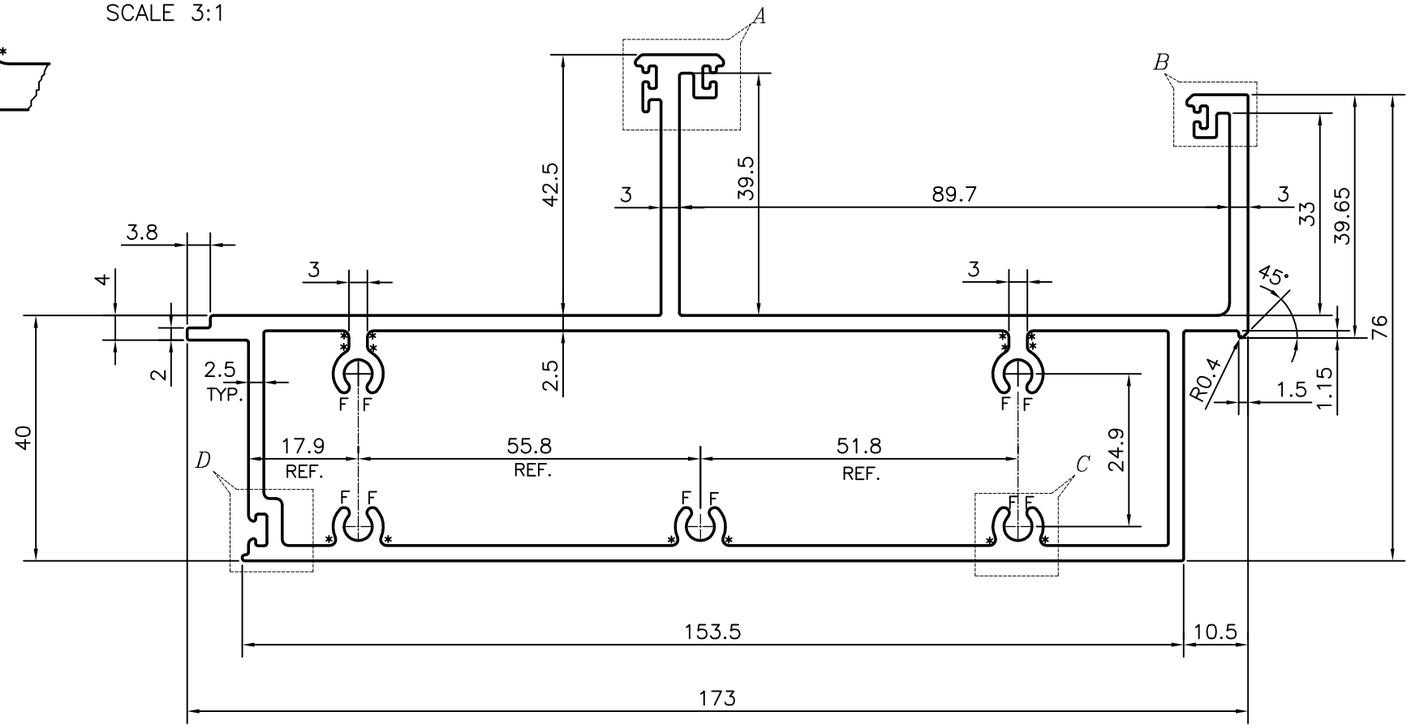

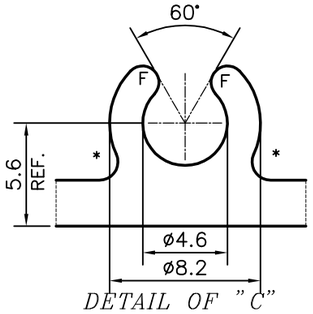

DETAIL OF "C"
SCALE 3:1

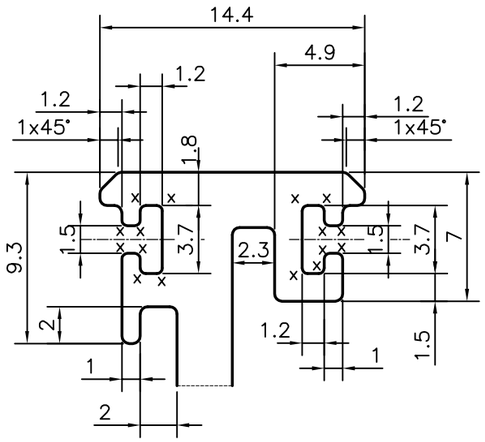

DETAIL OF "A"
SCALE 3:1

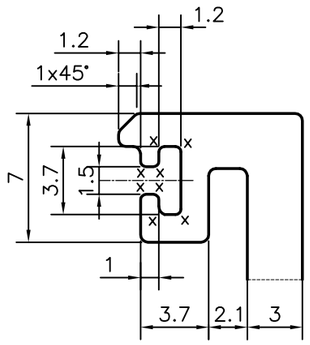

DETAIL OF "B"
SCALE 3:1

* = RADIUS 1 mm. (19 PLACES)
X = RADIUS 0.3 mm. (24 PLACES)
F = FULL RADIUS (10 PLACES)

TOLERANCES ON OVERALL WIDTHS & WIDTHS ACROSS FLATS OF BARS, & REGULAR SECTIONS			
UPTO 6.40mm – ±0.20	UPTO 32.0mm – ±0.38	UPTO 120.0mm – ±0.85	1. STRAIGHTNESS=1.0mm/M
UPTO 10.0mm – ±0.23	UPTO 50.0mm – ±0.46	UPTO 160.0mm – ±1.02	2. TWIST=1.0mm/M
UPTO 12.0mm – ±0.25	UPTO 60.0mm – ±0.53	UPTO 200.0mm – ±1.14	3. ANGULARITY= ±1°
UPTO 16.0mm – ±0.28	UPTO 80.0mm – ±0.69	UPTO 250.0mm – ±1.40	4. FLATNESS =0.007xWIDTH
UPTO 25.0mm – ±0.30	UPTO 100.0mm – ±0.75	UPTO 300.0mm – ±1.65	

JINDAL
SYMBOL OF QUALITY
AN ISO 9001 COMPANY

JINDAL ALUMINIUM LTD.
BANGALORE–560073 (INDIA)

	NAME	DATE
DRAWN	J.P.KAUSHIK	22–03–2017
CHECKED		
APPROVED	B.NATARAJA	27–04–2017

1. ALL DIMENSIONS ARE IN mm.
2. ROUND OFF ALL SHARP CORNERS WITH 0.40 mm.
3. TOLERANCES WILL BE AS PER IS:6477–1983 , UNLESS OTHERWISE SPECIFIED

SCALE	1:1
AREA mm^2	1480.606
PERIMETER mm.	667.502
WEIGHT kg/m	3.998

PARTY'S NAME	ALUFIT (INDIA) PRIVATE LIMITED, BANGALORE
PARTY'S DRAWING No.	AS PER AUTOCAD DRAWING–LR–04
ALLOY & TEMPER	6063 T6
DESCRIPTION	CURTAIN WALL SECTION–HEAD TRANSOM–1

DRAWING No.	SECTION No.
P–16732–1	–
E0647	E0647