P−16742
E0654

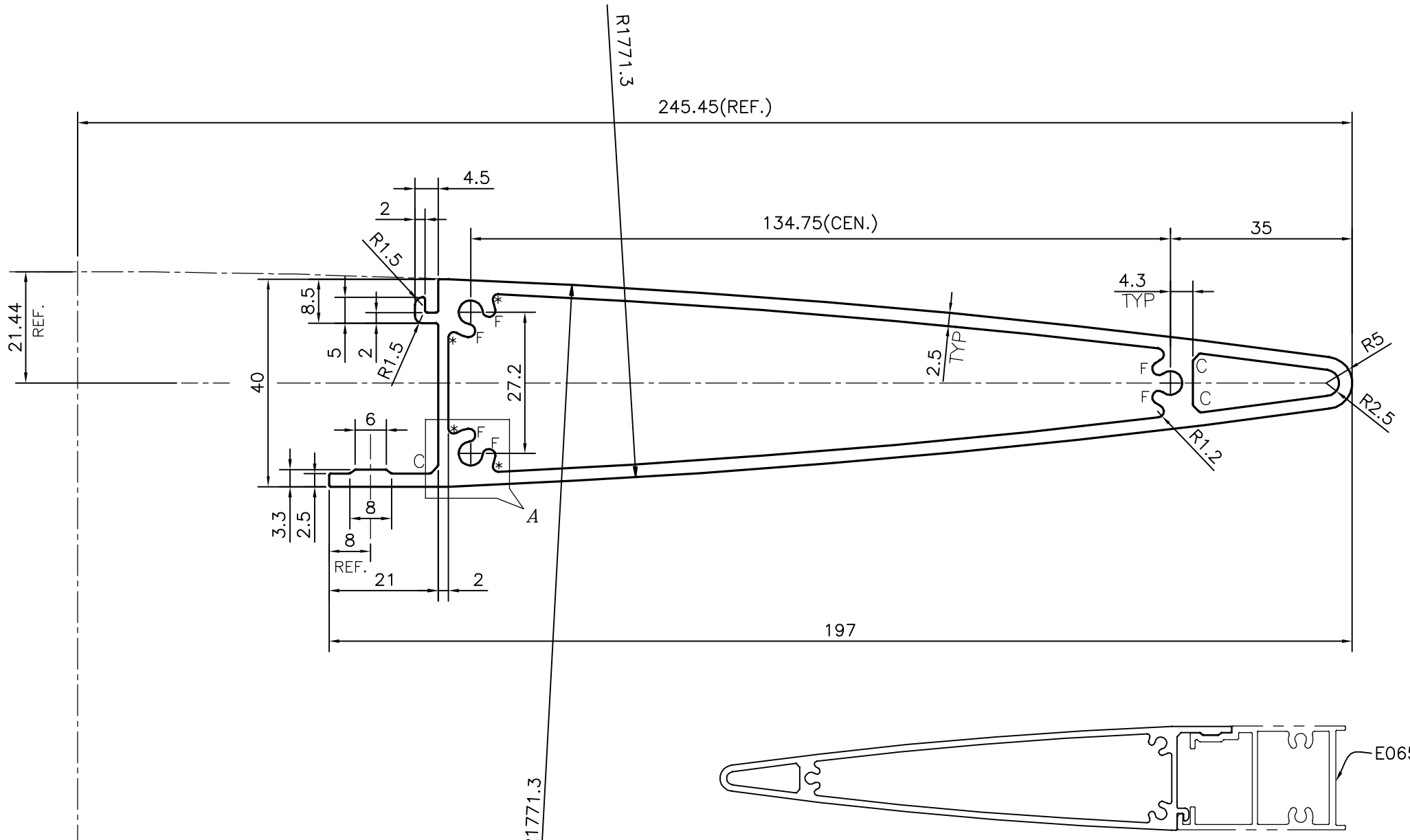

ISSUE−2

CHAMFER ADDED 3 PLACES

WEIGHT ALSO CHANGED FROM 3.187 TO 3.195 kg/m

C = CHAMFER 1.5x45°(3 PLACES)

* = RADIUS 1 mm. (4 PLACES)

F = FULL RADIUS (6 PLACES)

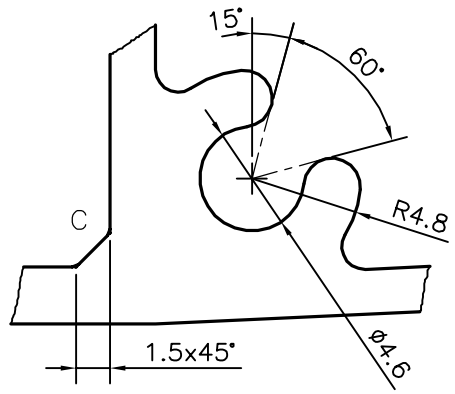

DETAIL OF "A"
SCALE 3:1

TOLERANCES ON OVERALL WIDTHS & WIDTHS ACROSS FLATS OF BARS, & REGULAR SECTIONS			
UPTO 6.40mm − ±0.20 UPTO 10.0mm − ±0.23 UPTO 12.0mm − ±0.25 UPTO 16.0mm − ±0.28 UPTO 25.0mm − ±0.30	UPTO 32.0mm − ±0.38 UPTO 50.0mm − ±0.46 UPTO 60.0mm − ±0.53 UPTO 80.0mm − ±0.69 UPTO 100.0mm − ±0.75	UPTO 120.0mm − ±0.85 UPTO 160.0mm − ±1.02 UPTO 200.0mm − ±1.14 UPTO 250.0mm − ±1.40 UPTO 300.0mm − ±1.65	1. STRAIGHTNESS=1.0mm/M 2. TWIST=1.0mm/M 3. ANGULARITY= ±1° 4. FLATNESS =0.007xWIDTH

JINDAL
SYMBOL OF QUALITY
AN ISO 9001 COMPANY

JINDAL ALUMINIUM LTD.
BANGALORE−560073 (INDIA)

	NAME	DATE
DRAWN	J.P.KAUSHIK	24−10−2017
CHECKED		
APPROVED	*B.NATARAJA*	25−11−2017

1. ALL DIMENSIONS ARE IN mm.
2. ROUND OFF ALL SHARP CORNERS WITH 0.40 mm.
3. TOLERANCES WILL BE AS PER IS:6477−1983 , UNLESS OTHERWISE SPECIFIED

SCALE	1:1
AREA mm^2	1183.481
PERIMETER mm.	453.411
WEIGHT kg/m	3.195

PARTY'S NAME	ALUFIT (INDIA) PRIVATE LIMITED, BANGALORE
PARTY'S DRAWING No.	AS PER AUTOCAD DRAWING−LR−16
ALLOY & TEMPER	6063 T6
DESCRIPTION	CURTAIN WALL SECTION−CAPPING

DRAWING No.	SECTION No.
P−16742	−
E0654	E0654(ISSUE−2)