P-17169-1

E0692

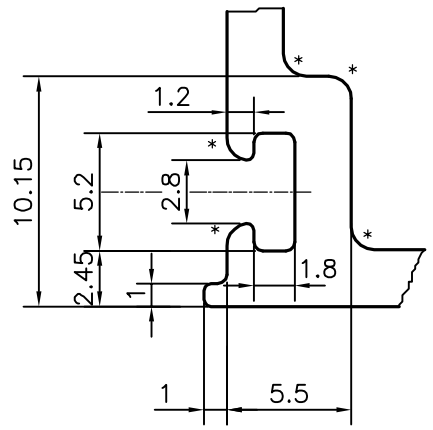

DETAIL OF "D"
SCALE 3:1

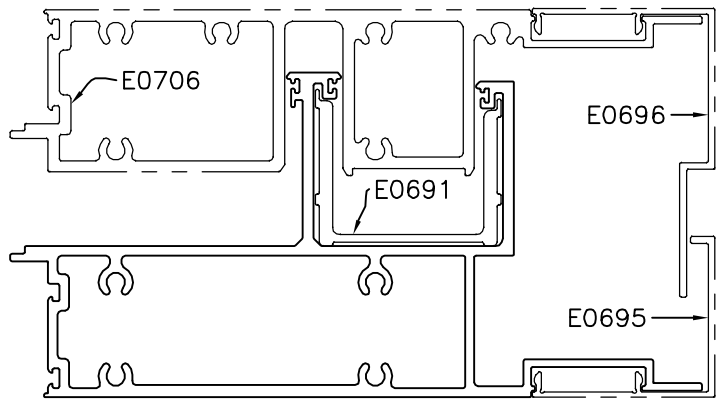

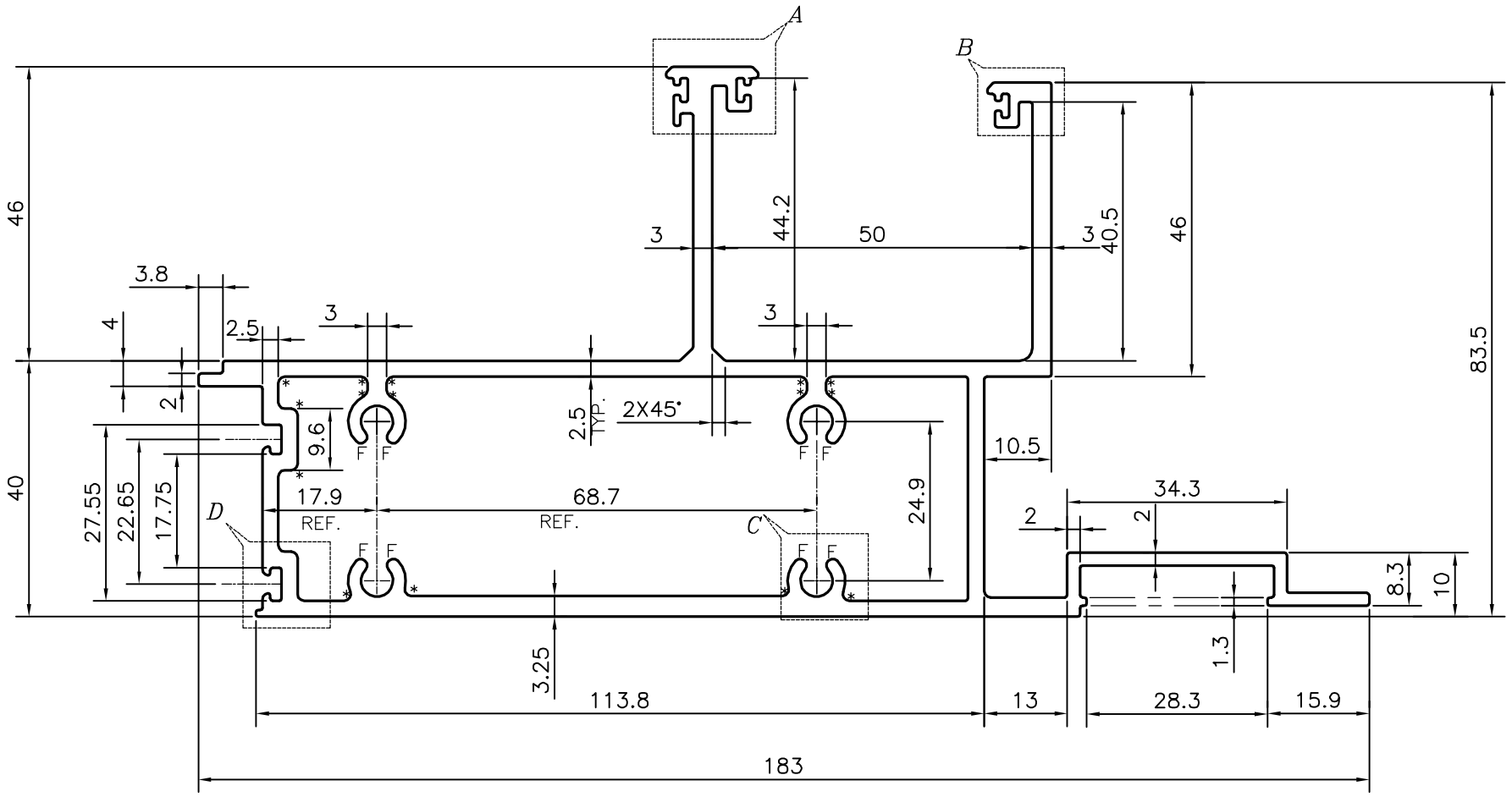

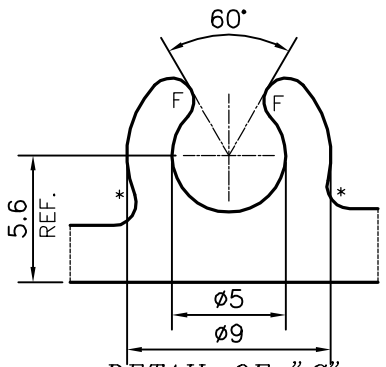

DETAIL OF "C"
SCALE 3:1

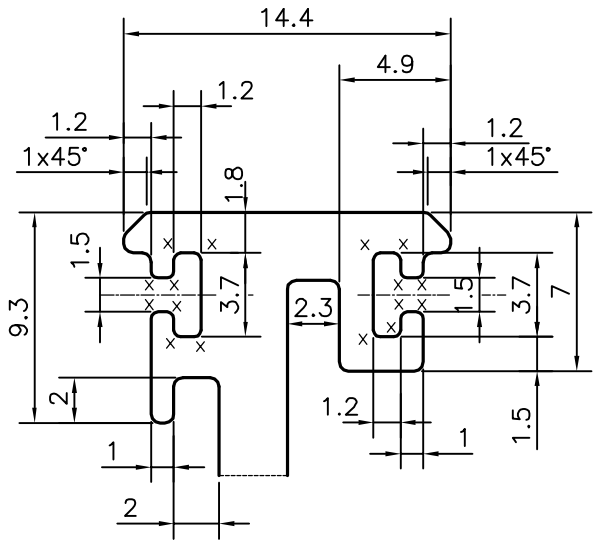

DETAIL OF "A"
SCALE 3:1

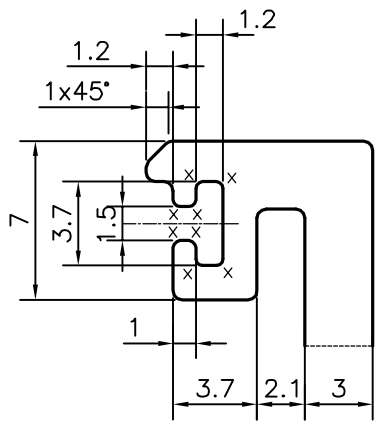

DETAIL OF "B"
SCALE 3:1

* = RADIUS 1 mm. (19 PLACES)
X = RADIUS 0.3 mm. (24 PLACES)
F = FULL RADIUS (10 PLACES)

TOLERANCES ON OVERALL WIDTHS & WIDTHS ACROSS FLATS OF BARS, & REGULAR SECTIONS			
UPTO 6.40mm – ±0.20	UPTO 32.0mm – ±0.38	UPTO 120.0mm – ±0.85	1. STRAIGHTNESS=1.0mm/M
UPTO 10.0mm – ±0.23	UPTO 50.0mm – ±0.46	UPTO 160.0mm – ±1.02	2. TWIST=1.0mm/M
UPTO 12.0mm – ±0.25	UPTO 60.0mm – ±0.53	UPTO 200.0mm – ±1.14	3. ANGULARITY= ±1°
UPTO 16.0mm – ±0.28	UPTO 80.0mm – ±0.69	UPTO 250.0mm – ±1.40	4. FLATNESS =0.007xWIDTH
UPTO 25.0mm – ±0.30	UPTO 100.0mm – ±0.75	UPTO 300.0mm – ±1.65	

JINDAL
SYMBOL OF QUALITY
AN ISO 9001 COMPANY

JINDAL ALUMINIUM LTD.
BANGALORE-560073 (INDIA)

	NAME	DATE
DRAWN	J.P.KAUSHIK	05-06-2017
CHECKED		
APPROVED	B.NATARAJA	24-06-2017

1. ALL DIMENSIONS ARE IN mm.
2. ROUND OFF ALL SHARP CORNERS WITH 0.40 mm.
3. TOLERANCES WILL BE AS PER IS:6477-1983 , UNLESS OTHERWISE SPECIFIED

SCALE	1:1
AREA mm^2	1534.825
PERIMETER mm.	761.726
WEIGHT kg/m	4.144

PARTY'S NAME	ALUFIT (INDIA) PRIVATE LIMITED, BANGALORE
PARTY'S DRAWING No.	AS PER AUTOCAD DRAWING-CR-19
ALLOY & TEMPER	6063 T6
DESCRIPTION	CURTAIN WALL SECTION-HEAD TRANSOM

DRAWING No.	SECTION No.
P-17169-1	–
E0692	E0692