P−17185
E0703

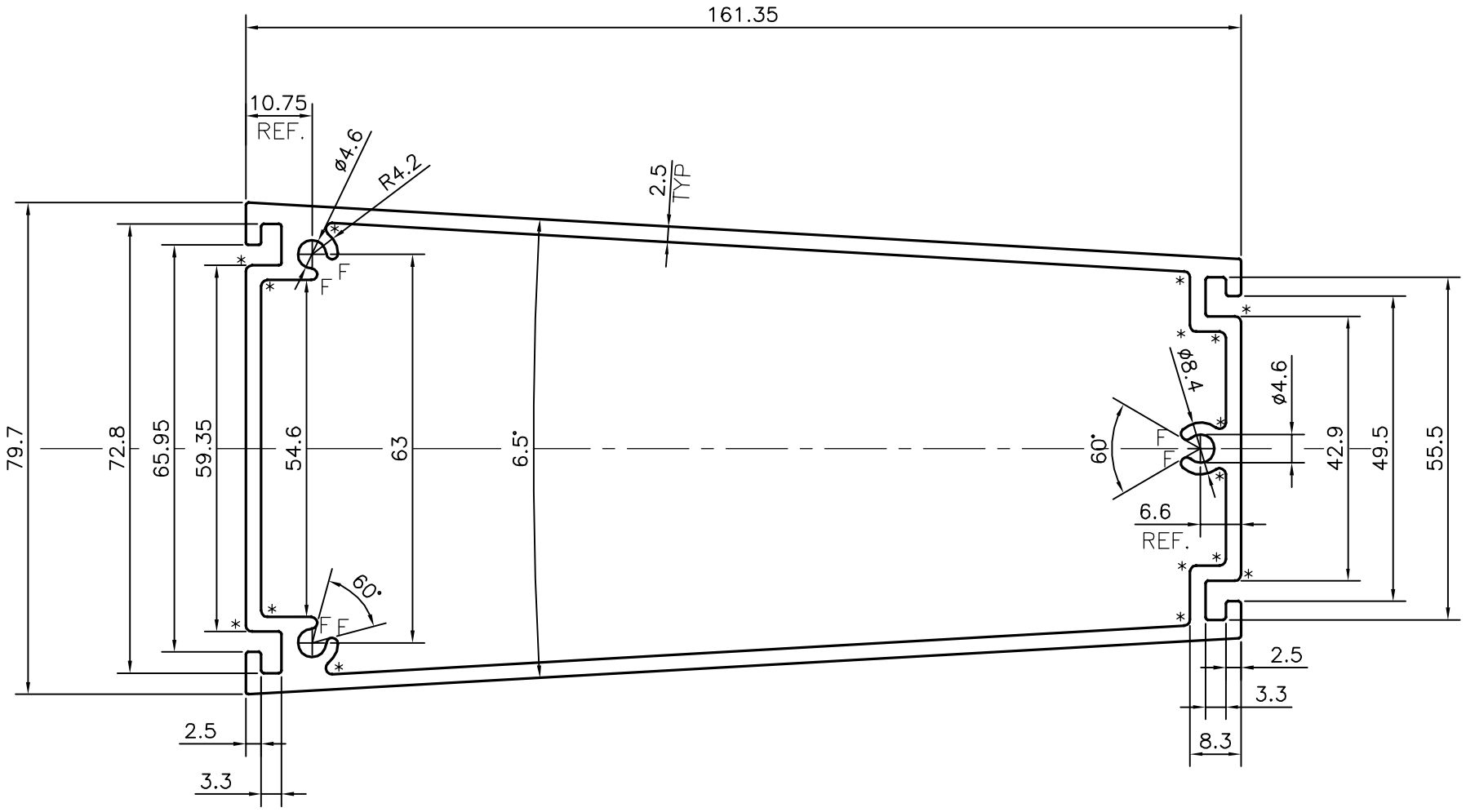

F = FULL RADIUS (6 PLACES)

* = 1.0 RADIUS (14 PLACES)

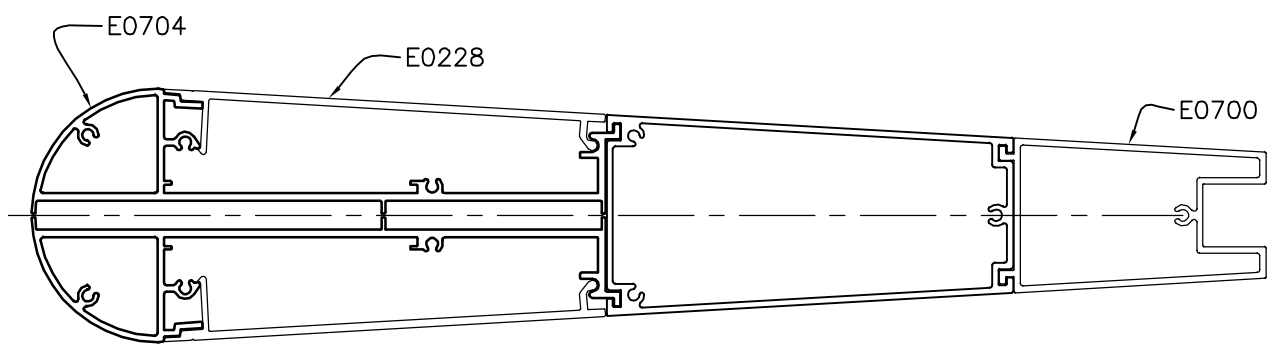

TOLERANCES ON OVERALL WIDTHS & WIDTHS ACROSS FLATS OF BARS, & REGULAR SECTIONS			
UPTO 6.40mm − ±0.20 UPTO 10.0mm − ±0.23 UPTO 12.0mm − ±0.25 UPTO 16.0mm − ±0.28 UPTO 25.0mm − ±0.30	UPTO 32.0mm − ±0.38 UPTO 50.0mm − ±0.46 UPTO 60.0mm − ±0.53 UPTO 80.0mm − ±0.69 UPTO 100.0mm − ±0.75	UPTO 120.0mm − ±0.85 UPTO 160.0mm − ±1.02 UPTO 200.0mm − ±1.14 UPTO 250.0mm − ±1.40 UPTO 300.0mm − ±1.65	1. STRAIGHTNESS=1.0mm/M 2. TWIST=1.0mm/M 3. ANGULARITY= ±1° 4. FLATNESS =0.007xWIDTH

			NAME	DATE
JINDAL SYMBOL OF QUALITY AN ISO 9001 COMPANY	*JINDAL ALUMINIUM LTD.* *BANGALORE−560073 (INDIA)*	DRAWN	J.P.KAUSHIK	26−05−2017
		CHECKED		
		APPROVED	*B.NATARAJA*	24−06−2017
1. ALL DIMENSIONS ARE IN mm. 2. ROUND OFF ALL SHARP CORNERS WITH 0.40 mm. 3. TOLERANCES WILL BE AS PER IS:6477−1983 , UNLESS OTHERWISE SPECIFIED		SCALE		1:1
		AREA mm^2		1335.424
		PERIMETER mm.		530.647
		WEIGHT kg/m		3.606
PARTY'S NAME	ALUFIT (INDIA) PRIVATE LIMITED, BANGALORE	DRAWING No.		SECTION No.
PARTY'S DRAWING No.	AS PER AUTOCAD DRAWING−CR−29	P−17185		−
ALLOY & TEMPER	6063 T6	E0703		E0703
DESCRIPTION	FIN PROFILE−2			