| |
|---|
| P−17155 |
| E0725 |
| |

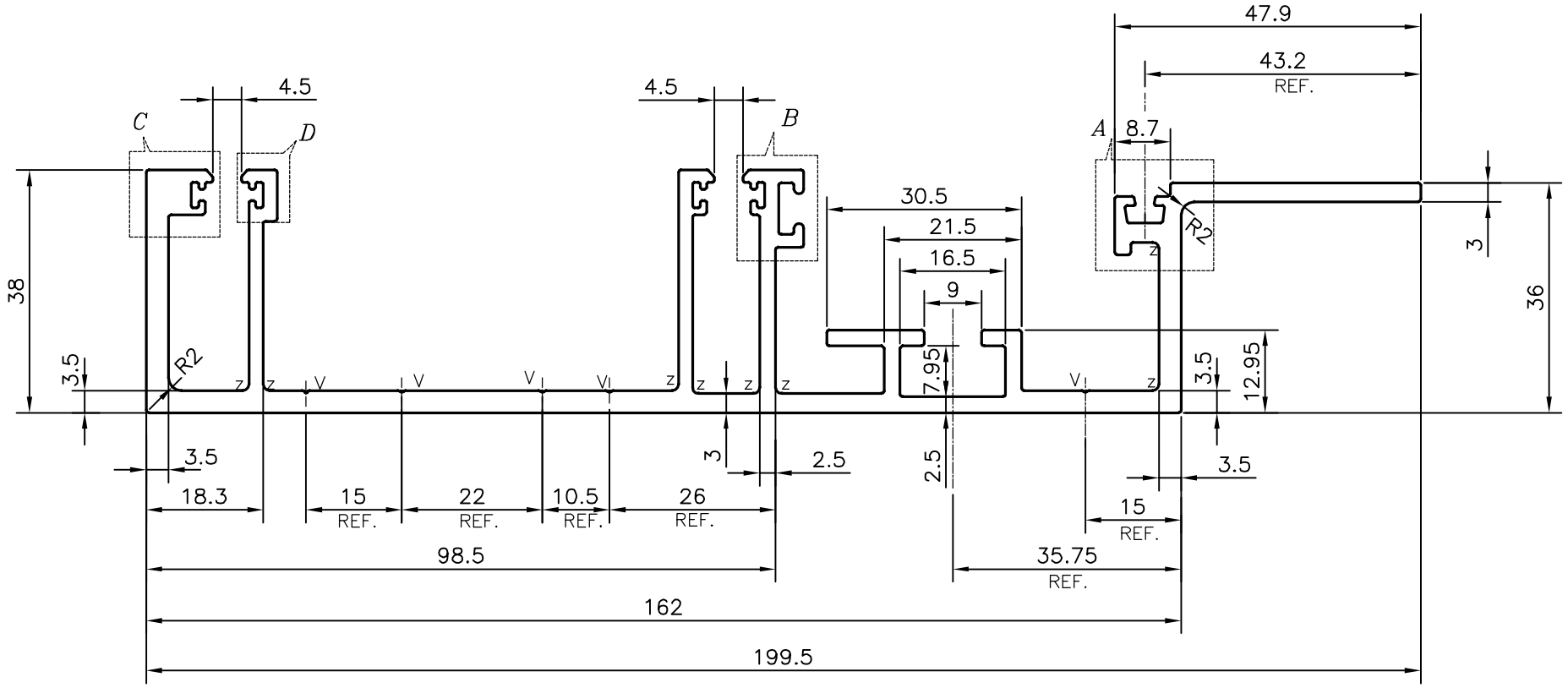


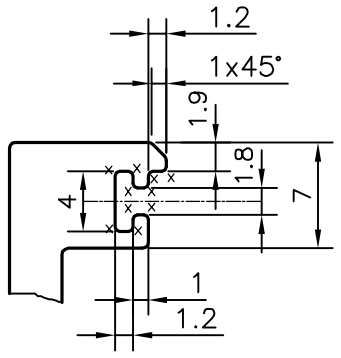


*DETAIL OF "C"*
SCALE 2:1

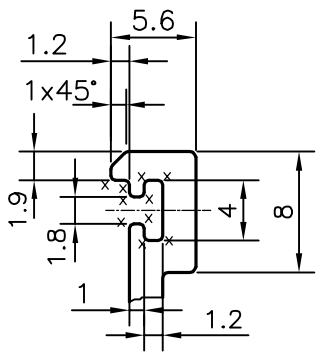


*DETAIL OF "D"*
SCALE 2:1

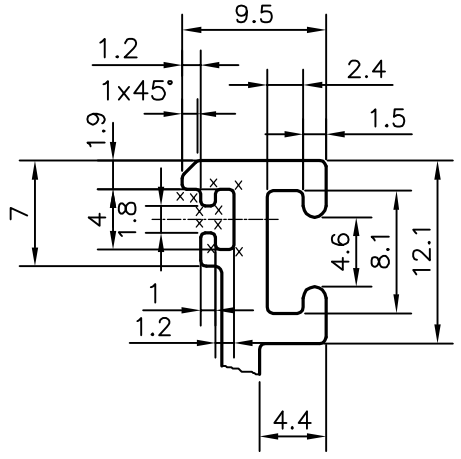


*DETAIL OF "B"*
SCALE 2:1

X = RADIUS 0.3 mm. (36 PLACES)

Z = RADIUS 1 mm. (8 PLACES)

V = VEE GROOVE 0.3x90° (5 PLACES)

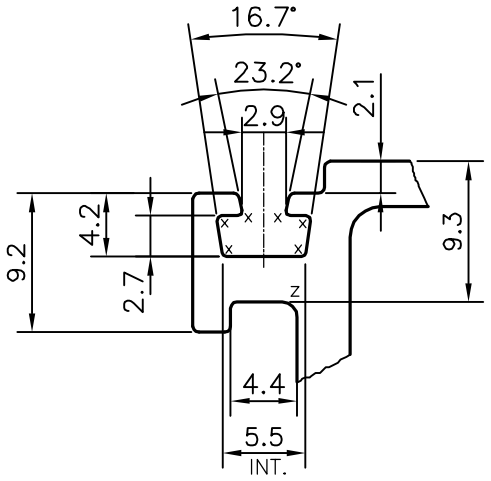


*DETAIL OF "A"*
SCALE 2:1

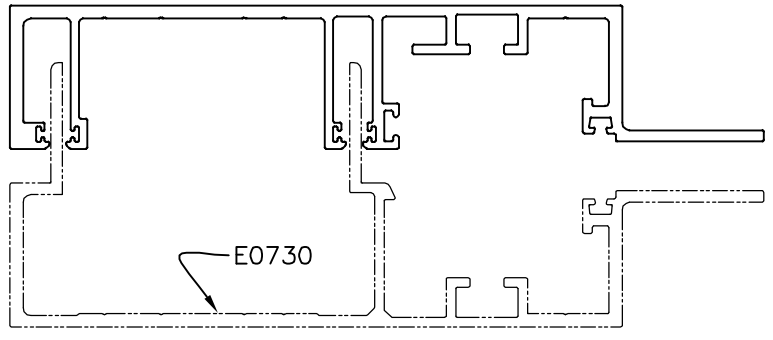


| TOLERANCES ON OVERALL WIDTHS & WIDTHS ACROSS FLATS OF BARS, & REGULAR SECTIONS | | | |
|---|---|---|---|
| UPTO 6.40mm − ±0.20<br>UPTO 10.0mm − ±0.23<br>UPTO 12.0mm − ±0.25<br>UPTO 16.0mm − ±0.28<br>UPTO 25.0mm − ±0.30 | UPTO 32.0mm − ±0.38<br>UPTO 50.0mm − ±0.46<br>UPTO 60.0mm − ±0.53<br>UPTO 80.0mm − ±0.69<br>UPTO 100.0mm − ±0.75 | UPTO 120.0mm − ±0.85<br>UPTO 160.0mm − ±1.02<br>UPTO 200.0mm − ±1.14<br>UPTO 250.0mm − ±1.40<br>UPTO 300.0mm − ±1.65 | 1. STRAIGHTNESS=1.7mm/M<br>2. TWIST=1.7mm/M<br>3. ANGULARITY= ±2°<br>4. FLATNESS =0.007xWIDTH |

JINDAL
SYMBOL OF QUALITY
AN ISO 9001 COMPANY

**JINDAL ALUMINIUM LTD.**
*BANGALORE−560073 (INDIA)*

| | NAME | DATE |
|---|---|---|
| DRAWN | J.P.KAUSHIK | 18−05−2017 |
| CHECKED | | |
| APPROVED | B.NATARAJA | 27−06−2017 |
| SCALE | | 1:1 |
| AREA $mm^2$ | | 1332.862 |
| PERIMETER mm. | | 923.662 |
| WEIGHT kg/m | | 3.599 |

1. ALL DIMENSIONS ARE IN mm.
2. ROUND OFF ALL SHARP CORNERS WITH 0.40 mm.
3. TOLERANCES WILL BE AS PER IS:3965−1981 , UNLESS OTHERWISE SPECIFIED

| | |
|---|---|
| PARTY'S NAME | ALUFIT (INDIA) PRIVATE LIMITED, BANGALORE |
| PARTY'S DRAWING No. | AS PER AUTOCAD DRAWING−AT−CW−02 |
| ALLOY & TEMPER | 6063 T6 |
| DESCRIPTION | CURTAIN WALL SECTION |

| DRAWING No. | SECTION No. |
|---|---|
| P−17155 | − |
| E0725 | E0725 |
| | |
| | |
| | |