P-17157-1
E0727

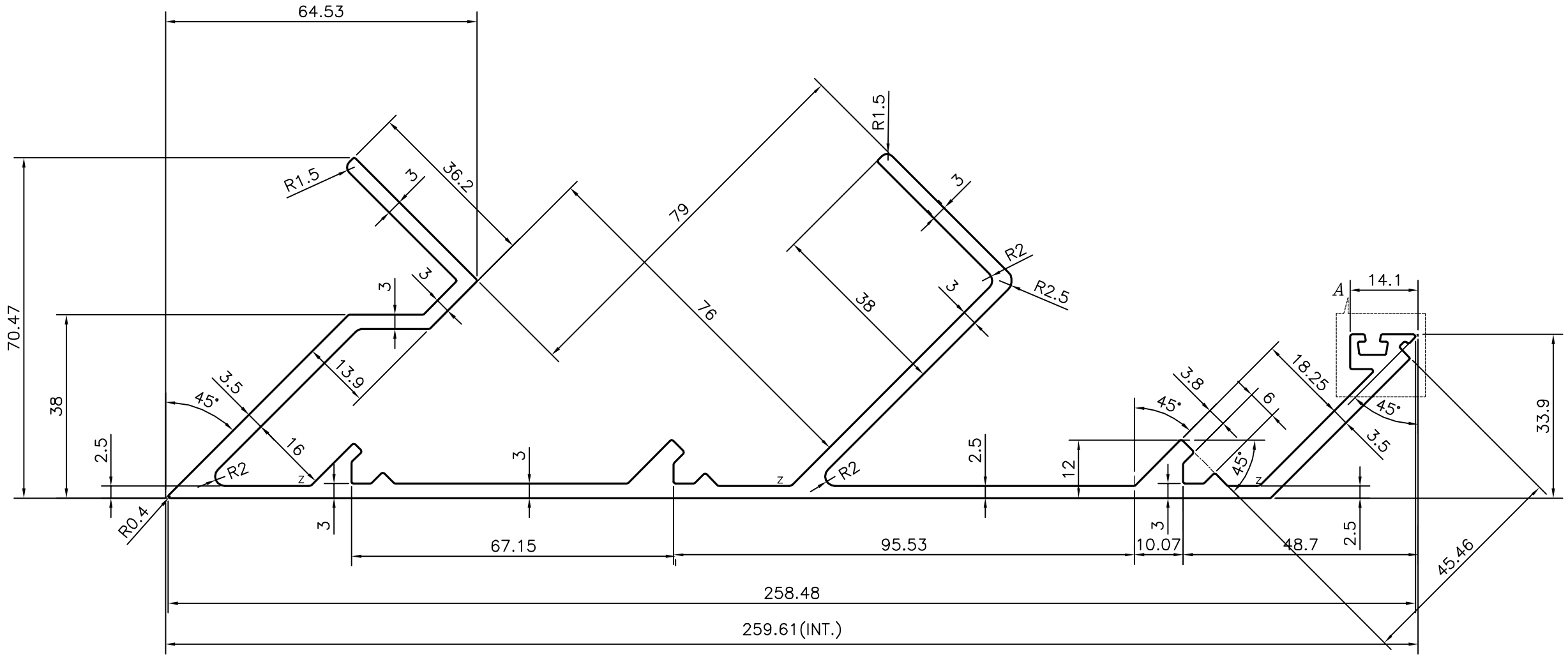

X = RADIUS 0.3 mm. (6 PLACES)

Z = RADIUS 1 mm. (3 PLACES)

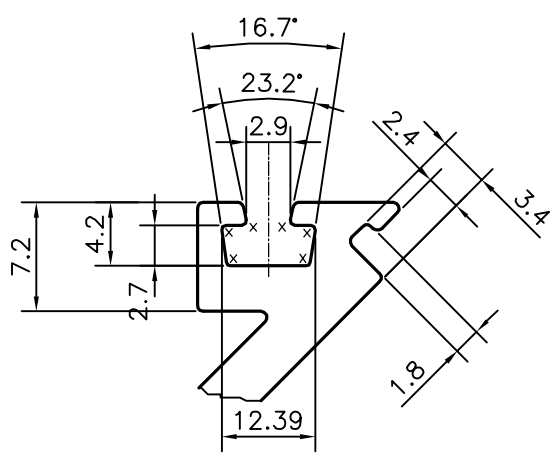

DETAIL OF "A"
SCALE 2:1

TOLERANCES ON OVERALL WIDTHS & WIDTHS ACROSS FLATS OF BARS, & REGULAR SECTIONS			
UPTO 6.40mm – ±0.20 UPTO 10.0mm – ±0.23 UPTO 12.0mm – ±0.25 UPTO 16.0mm – ±0.28 UPTO 25.0mm – ±0.30	UPTO 32.0mm – ±0.38 UPTO 50.0mm – ±0.46 UPTO 60.0mm – ±0.53 UPTO 80.0mm – ±0.69 UPTO 100.0mm – ±0.75	UPTO 120.0mm – ±0.85 UPTO 160.0mm – ±1.02 UPTO 200.0mm – ±1.14 UPTO 250.0mm – ±1.40 UPTO 300.0mm – ±1.65	1. STRAIGHTNESS=1.7mm/M 2. TWIST=1.7mm/M 3. ANGULARITY= ±2° 4. FLATNESS =0.007xWIDTH

JINDAL
SYMBOL OF QUALITY
AN ISO 9001 COMPANY

JINDAL ALUMINIUM LTD.
BANGALORE-560073 (INDIA)

	NAME	DATE
DRAWN	J.P.KAUSHIK	31-05-2017
CHECKED		
APPROVED	B.NATARAJA	27-06-2017

1. ALL DIMENSIONS ARE IN mm.
2. ROUND OFF ALL SHARP CORNERS WITH 0.40 mm.
3. TOLERANCES WILL BE AS PER IS:3965-1981 , UNLESS OTHERWISE SPECIFIED

SCALE	1:1
AREA mm^2	1613.594
PERIMETER mm.	1020.075
WEIGHT kg/m	4.357

PARTY'S NAME	ALUFIT (INDIA) PRIVATE LIMITED, BANGALORE
PARTY'S DRAWING No.	AS PER AUTOCAD DRAWING-AT-CW-17
ALLOY & TEMPER	6063 T6
DESCRIPTION	CURTAIN WALL SECTION

DRAWING No.	SECTION No.
P-17157-1	–
E0727	E0727