P−17417
E0741

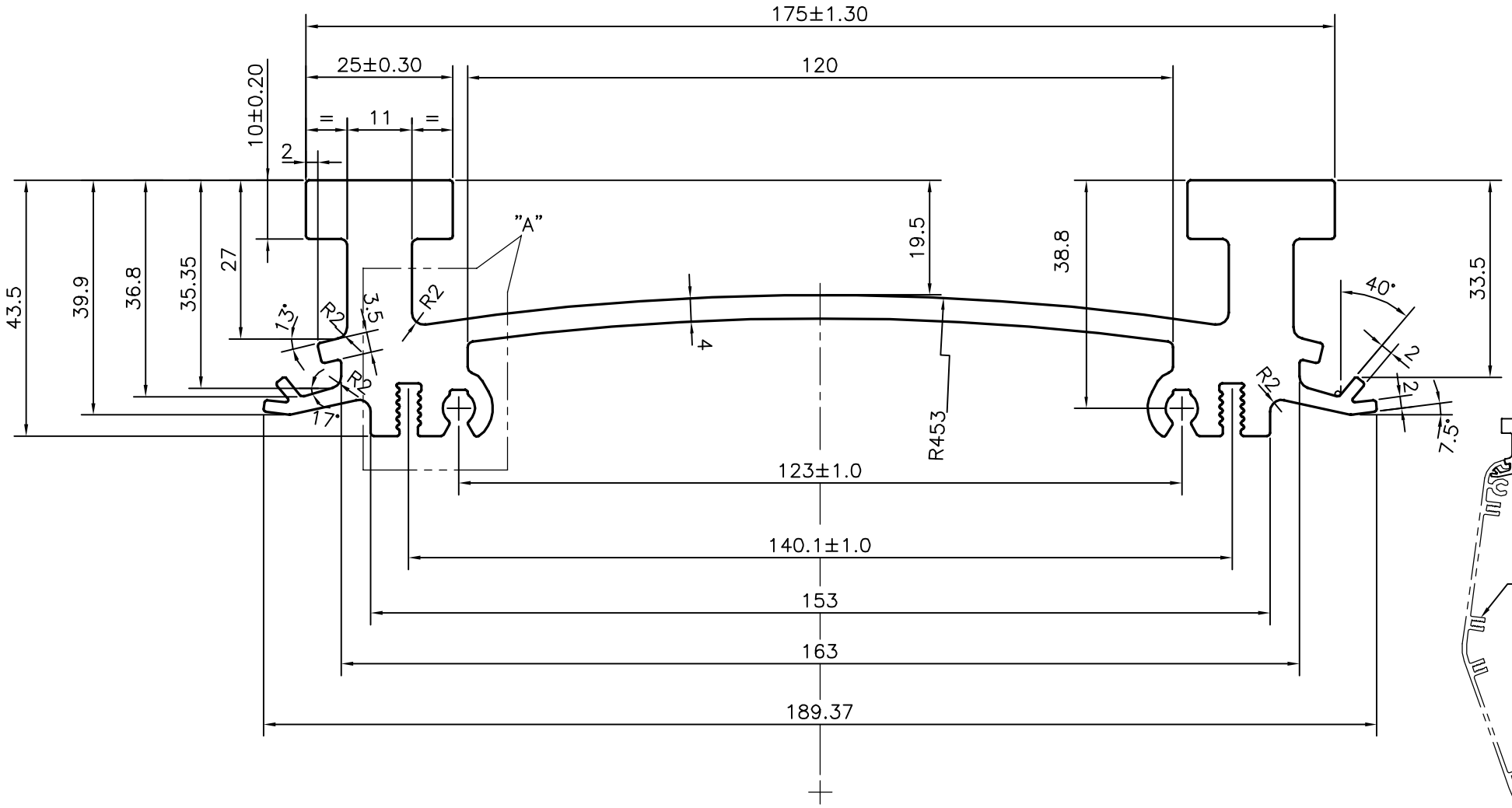

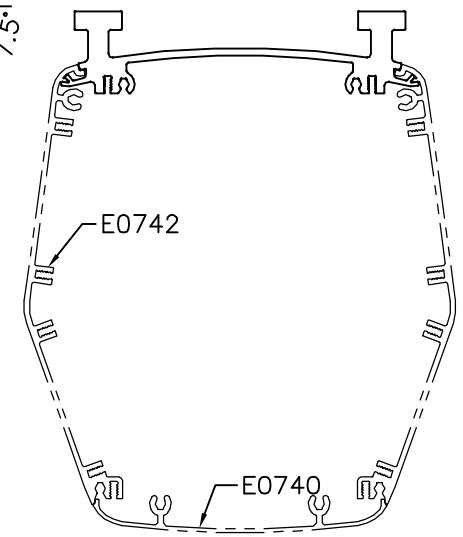

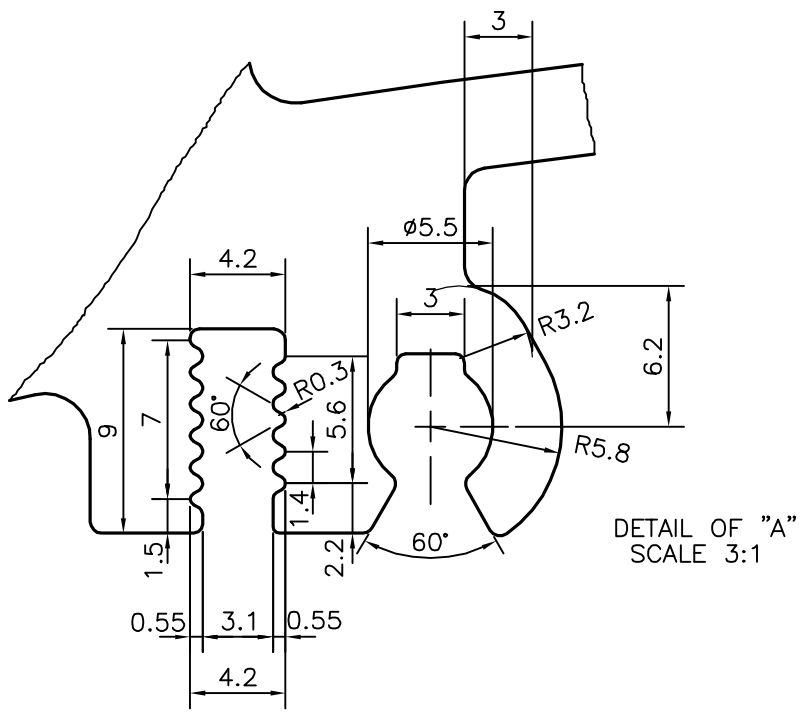

DETAIL OF "A"
SCALE 3:1

TOLERANCES ON OVERALL WIDTHS & WIDTHS ACROSS FLATS OF BARS, & REGULAR SECTIONS			
UPTO 6.40mm − ±0.20 UPTO 10.0mm − ±0.23 UPTO 12.0mm − ±0.25 UPTO 16.0mm − ±0.28 UPTO 25.0mm − ±0.30	UPTO 32.0mm − ±0.38 UPTO 50.0mm − ±0.46 UPTO 60.0mm − ±0.53 UPTO 80.0mm − ±0.69 UPTO 100.0mm − ±0.75	UPTO 120.0mm − ±0.85 UPTO 160.0mm − ±1.02 UPTO 200.0mm − ±1.14 UPTO 250.0mm − ±1.40 UPTO 300.0mm − ±1.65	UPTO 320.00mm − ±1.70

JINDAL
SYMBOL OF QUALITY
AN ISO 9001 COMPANY

JINDAL ALUMINIUM LTD.
BANGALORE−560073 (INDIA)

	NAME	DATE
DRAWN	J.P.KAUSHIK	22−08−2017
CHECKED		
APPROVED	B.NATARAJA	09−09−2017
SCALE		1:1
AREA mm^2		2115.563
PERIMETER mm.		707.493
WEIGHT kg/m		5.712

1. ALL DIMENSIONS ARE IN mm.
2. ROUND OFF ALL SHARP CORNERS WITH 0.40 mm.
3. TOLERANCES WILL BE AS PER, IS:3965−1981 UNLESS OTHERWISE SPECIFIED

PARTY'S NAME	DRAEGER INDIA PVT. LTD., PALGHAR
PARTY'S DRAWING No.	2P00700
ALLOY & TEMPER	6063 T6
DESCRIPTION	MISC. SECTION

DRAWING No.	SECTION No.
P−17417	−
E0741	E0741