P−17700
E0780

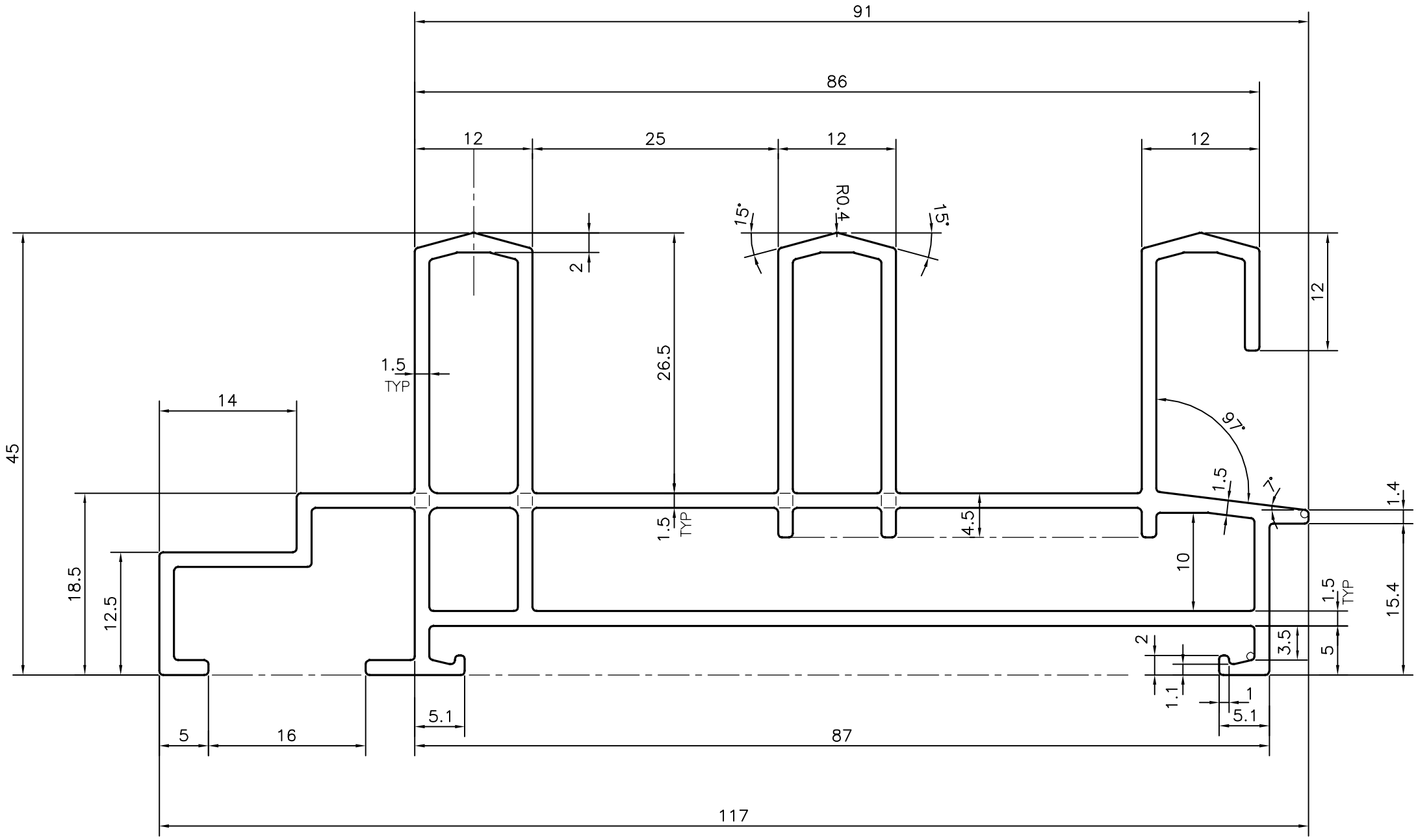

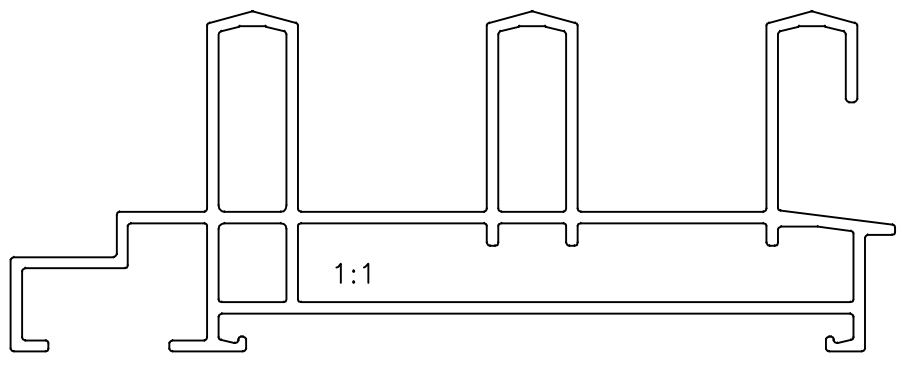

JINDAL SYMBOL OF QUALITY AN ISO 9001 COMPANY	*JINDAL ALUMINIUM LTD.* *BANGALORE−560073 (INDIA)*		NAME	DATE
		DRAWN	J.P.KAUSHIK	14−12−2017
		CHECKED		
		APPROVED	B.NATARAJA	25−12−2017
1. ALL DIMENSIONS ARE IN mm. 2. ROUND OFF ALL SHARP CORNERS WITH 0.40 mm. 3. TOLERANCES WILL BE AS PER IS:6477−1983 UNLESS OTHERWISE SPECIFIED		SCALE		2:1
		AREA mm^2		680.529
		PERIMETER mm.		530.741
		WEIGHT kg/m		1.837
PARTY'S NAME	ELIXIR MET FORM PVT. LTD., HYDERABAD	DRAWING No.		SECTION No.
PARTY'S DRAWING No.	AS PER DRAWING	P−17700		−
ALLOY & TEMPER	6063 T6	E0780		E0780
DESCRIPTION	WINDOW SECTION			