P-17736-1

E0781

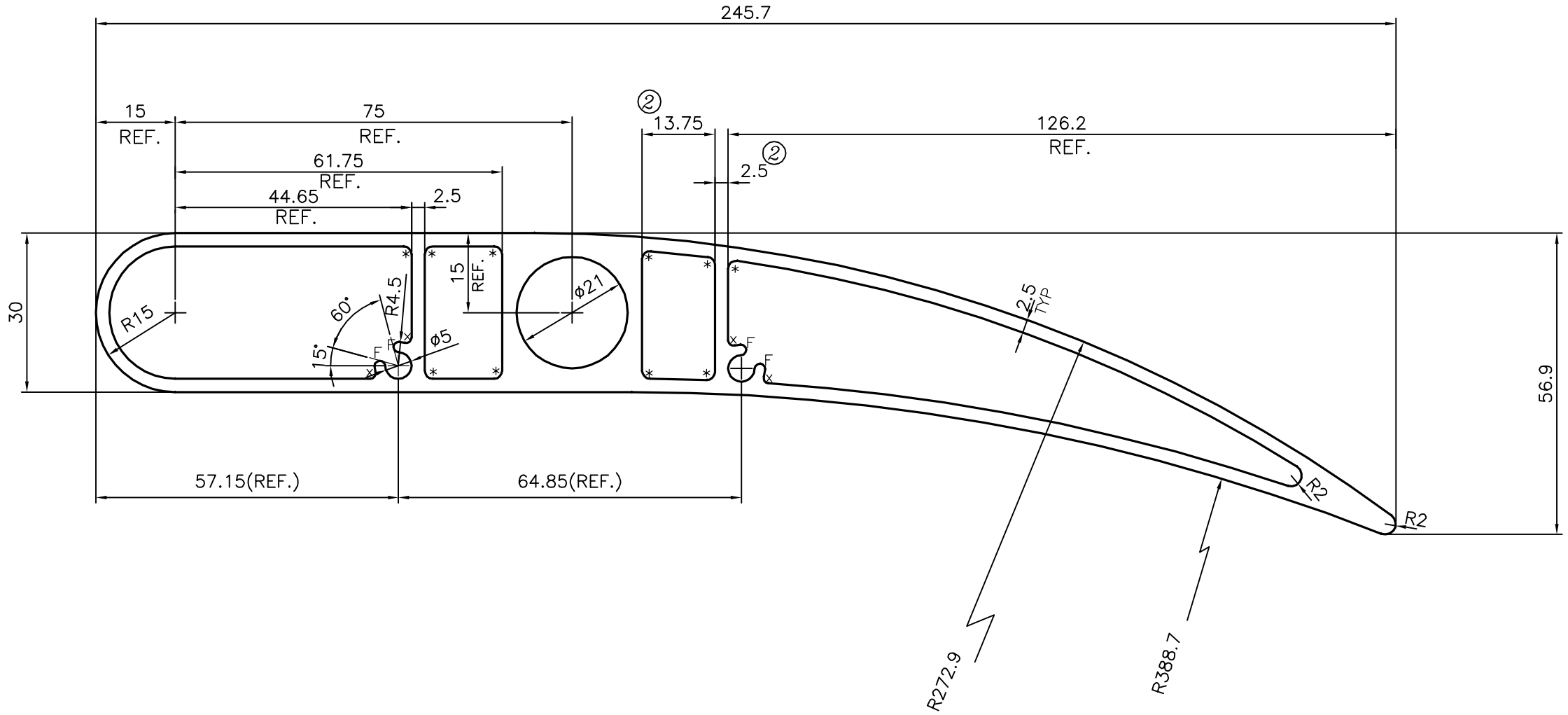

ISSUE-2

THICKNESS CHANGED FROM 4.0 mm TO 2.5 mm DIMENSION CHANGED FROM 12.25 mm TO 13.75 mm,

(THIS MODIFICATION AS PER PARTY REQUIREMENT AS E MAIL ON DATED (22/01/2018)

WEIGHT ALSO CHANGED FROM 4.923 TO 4.829 kg/m

x = 1.0 RADIUS (4 PLACES)
F = FULL RADIUS (4 PLACES)
* = 1.5 RADIUS (10 PLACES)

JINDAL
SYMBOL OF QUALITY
AN ISO 9001 COMPANY

JINDAL ALUMINIUM LTD.
BANGALORE-560073 (INDIA)

1. ALL DIMENSIONS ARE IN mm.
2. ROUND OFF ALL SHARP CORNERS WITH 0.40 mm.
3. TOLERANCES WILL BE AS PER IS:6477-1983 UNLESS OTHERWISE SPECIFIED

		NAME	DATE
DRAWN		J.P.KAUSHIK	22-01-2018
CHECKED			
APPROVED		B.NATARAJA	29-01-2018
SCALE			1:1
AREA mm^2			1788.632
PERIMETER mm.			525.53
WEIGHT kg/m			4.829
PARTY'S NAME	RAM RATNA ELECTRICALS LTD., HARIDWAR		
PARTY'S DRAWING No.	AS PER DRAWING & REQUIREMENT		
ALLOY & TEMPER	6063 T6		
DESCRIPTION	LOUVER BLADE SECTION		

DRAWING No.	SECTION No.
P-17736-1	–
E0781	E0781(ISSUE-2)