P−17975
E0812

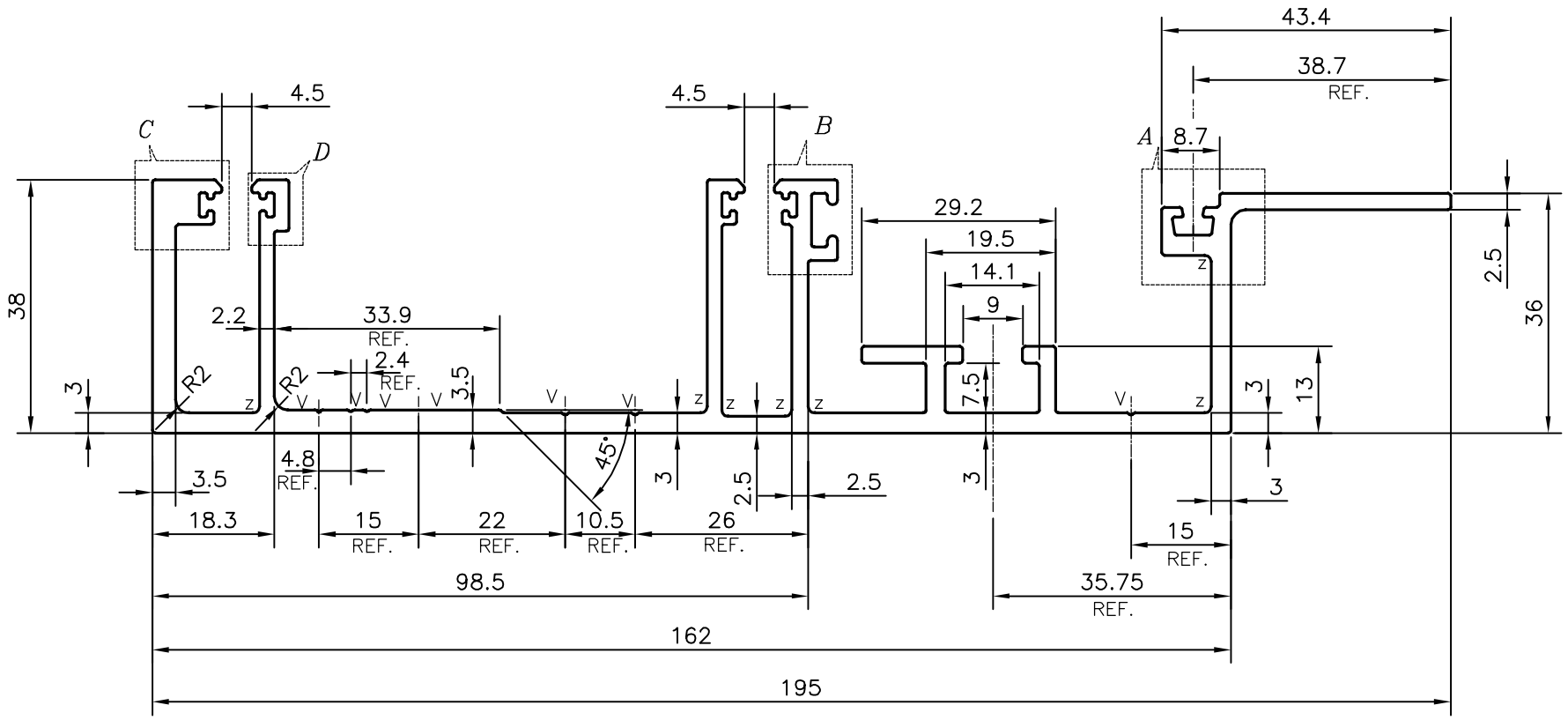

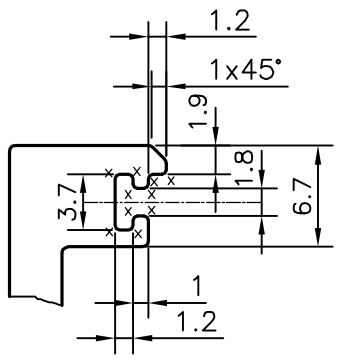

DETAIL OF "C"
SCALE 2:1

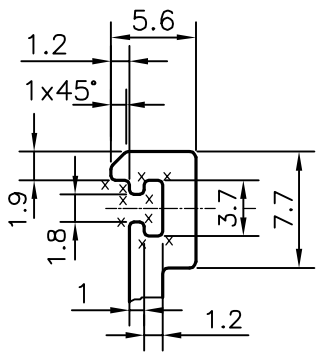

DETAIL OF "D"
SCALE 2:1

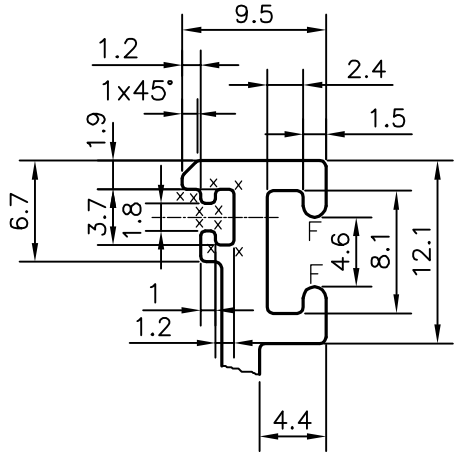

DETAIL OF "B"
SCALE 2:1

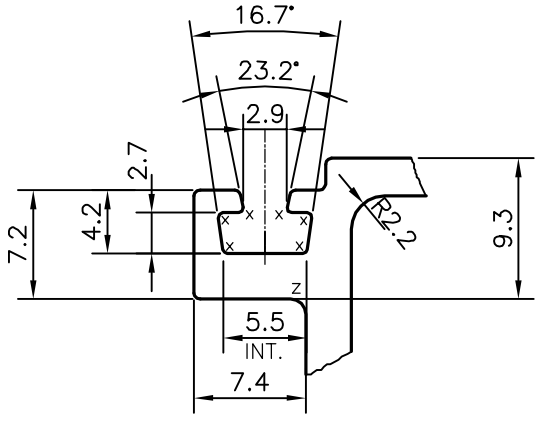

DETAIL OF "A"
SCALE 2:1

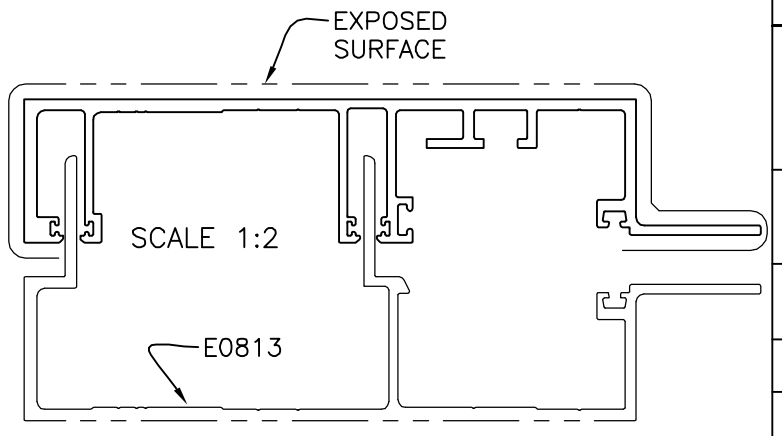

F = FULL RADIUS (2 PLACES)
X = RADIUS 0.3 mm. (36 PLACES)
Z = RADIUS 1 mm. (8 PLACES)
V = VEE GROOVE 0.3x90° (7 PLACES)

TOLERANCES ON OVERALL WIDTHS & WIDTHS ACROSS FLATS OF BARS, & REGULAR SECTIONS			
UPTO 6.40mm − ±0.20	UPTO 32.0mm − ±0.38	UPTO 120.0mm − ±0.85	1. STRAIGHTNESS=1.0mm/M
UPTO 10.0mm − ±0.23	UPTO 50.0mm − ±0.46	UPTO 160.0mm − ±1.02	2. TWIST=1.0mm/M
UPTO 12.0mm − ±0.25	UPTO 60.0mm − ±0.53	UPTO 200.0mm − ±1.14	3. ANGULARITY= ±1°
UPTO 16.0mm − ±0.28	UPTO 80.0mm − ±0.69	UPTO 250.0mm − ±1.40	4. FLATNESS =0.007xWIDTH
UPTO 25.0mm − ±0.30	UPTO 100.0mm − ±0.75	UPTO 300.0mm − ±1.65	

JINDAL
SYMBOL OF QUALITY
AN ISO 9001 COMPANY

JINDAL ALUMINIUM LTD.
BANGALORE−560073 (INDIA)

1. ALL DIMENSIONS ARE IN mm.
2. ROUND OFF ALL SHARP CORNERS WITH 0.40 mm.
3. TOLERANCES WILL BE AS PER IS:3965−1981 , UNLESS OTHERWISE SPECIFIED

	NAME	DATE
DRAWN	J.P.KAUSHIK	12−03−2018
CHECKED		
APPROVED	B.NATARAJA	29−03−2018
SCALE		1:1
AREA mm^2		1255.183
PERIMETER mm.		908.751
WEIGHT kg/m		3.389

PARTY'S NAME	ALUFIT (INDIA) PRIVATE LIMITED, BANGALORE
PARTY'S DRAWING No.	AL−SV−03
ALLOY & TEMPER	6063 T6
DESCRIPTION	CURTAIN WALL SECTION−FEMALE MULLION

DRAWING No.	SECTION No.
P−17975	−
E0812	E0812