P−18385−1
E0868

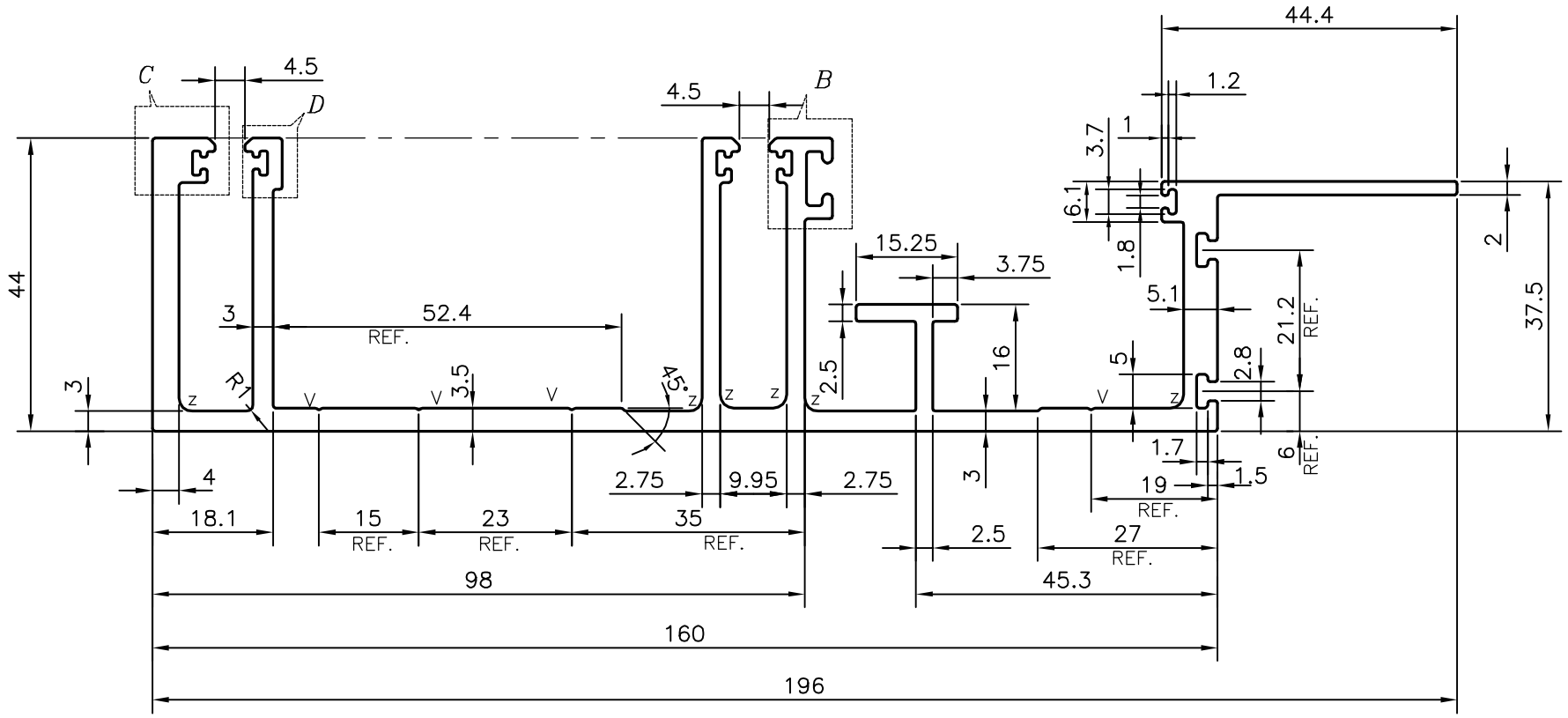

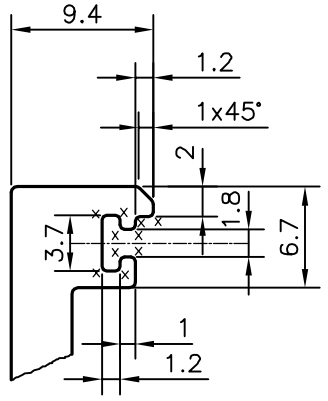

DETAIL OF "C"
SCALE 2:1

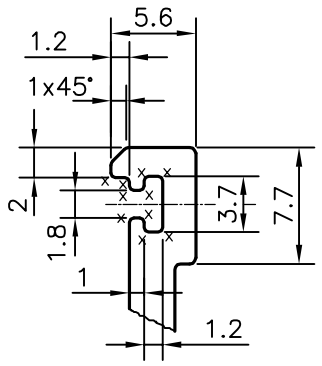

DETAIL OF "D"
SCALE 2:1

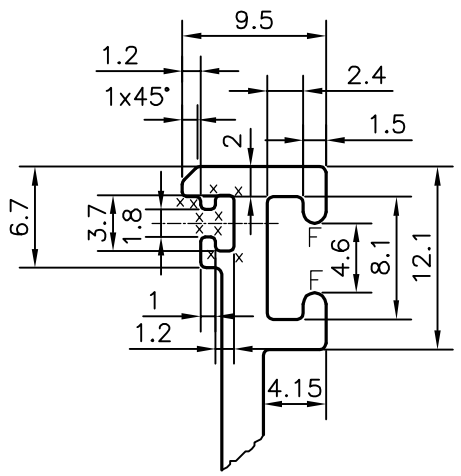

DETAIL OF "B"
SCALE 2:1

F = FULL RADIUS (2 PLACES)
X = RADIUS 0.3 mm. (30 PLACES)
Z = RADIUS 2.0 mm. (6 PLACES)
V = VEE GROOVE 0.3x90° (4 PLACES)

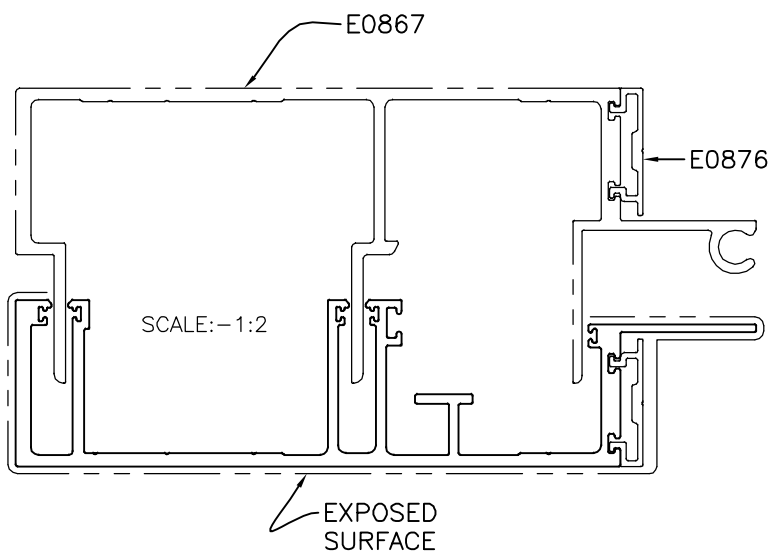

TOLERANCES ON OVERALL WIDTHS & WIDTHS ACROSS FLATS OF BARS, & REGULAR SECTIONS			
UPTO 6.40mm − ±0.20 UPTO 10.0mm − ±0.23 UPTO 12.0mm − ±0.25 UPTO 16.0mm − ±0.28 UPTO 25.0mm − ±0.30	UPTO 32.0mm − ±0.38 UPTO 50.0mm − ±0.46 UPTO 60.0mm − ±0.53 UPTO 80.0mm − ±0.69 UPTO 100.0mm − ±0.75	UPTO 120.0mm − ±0.85 UPTO 160.0mm − ±1.02 UPTO 200.0mm − ±1.14 UPTO 250.0mm − ±1.40 UPTO 300.0mm − ±1.65	1. STRAIGHTNESS=1.0mm/M 2. TWIST=1.0mm/M 3. ANGULARITY= ±1° 4. FLATNESS =0.007xWIDTH

JINDAL
SYMBOL OF QUALITY
AN ISO 9001 COMPANY

JINDAL ALUMINIUM LTD.
BANGALORE−560073 (INDIA)

	NAME	DATE
DRAWN	J.P.KAUSHIK	11−07−2018
CHECKED		
APPROVED	B.NATARAJA	14−07−2018

1. ALL DIMENSIONS ARE IN mm.
2. ROUND OFF ALL SHARP CORNERS WITH 0.40 mm.
3. TOLERANCES WILL BE AS PER IS:3965−1981 , UNLESS OTHERWISE SPECIFIED

SCALE	1:1
AREA mm^2	1412.891
PERIMETER mm.	946.171
WEIGHT kg/m	3.815

PARTY'S NAME	ALUFIT (INDIA) PRIVATE LIMITED, BANGALORE
PARTY'S DRAWING No.	WTC−DIE−04
ALLOY & TEMPER	6063 T6
DESCRIPTION	CURTAIN WALL SECTION−FEMALE MULLION

DRAWING No.	SECTION No.
P−18385−1	−
E0868	E0868