P–18392–1
E0872

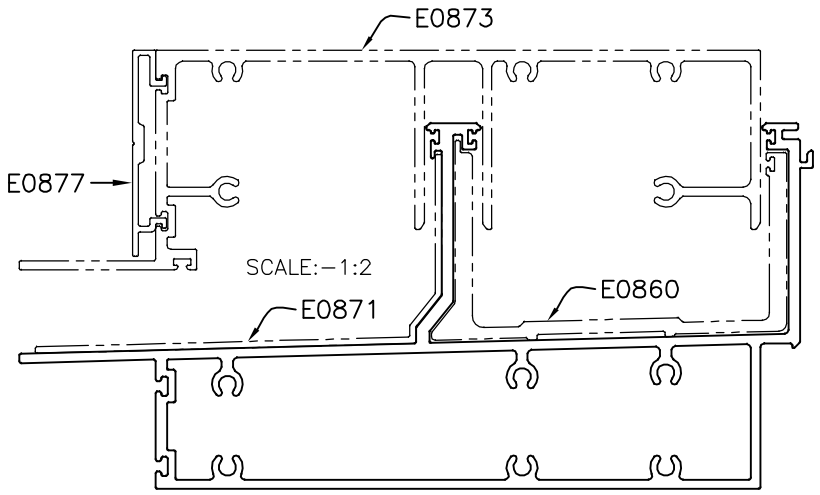

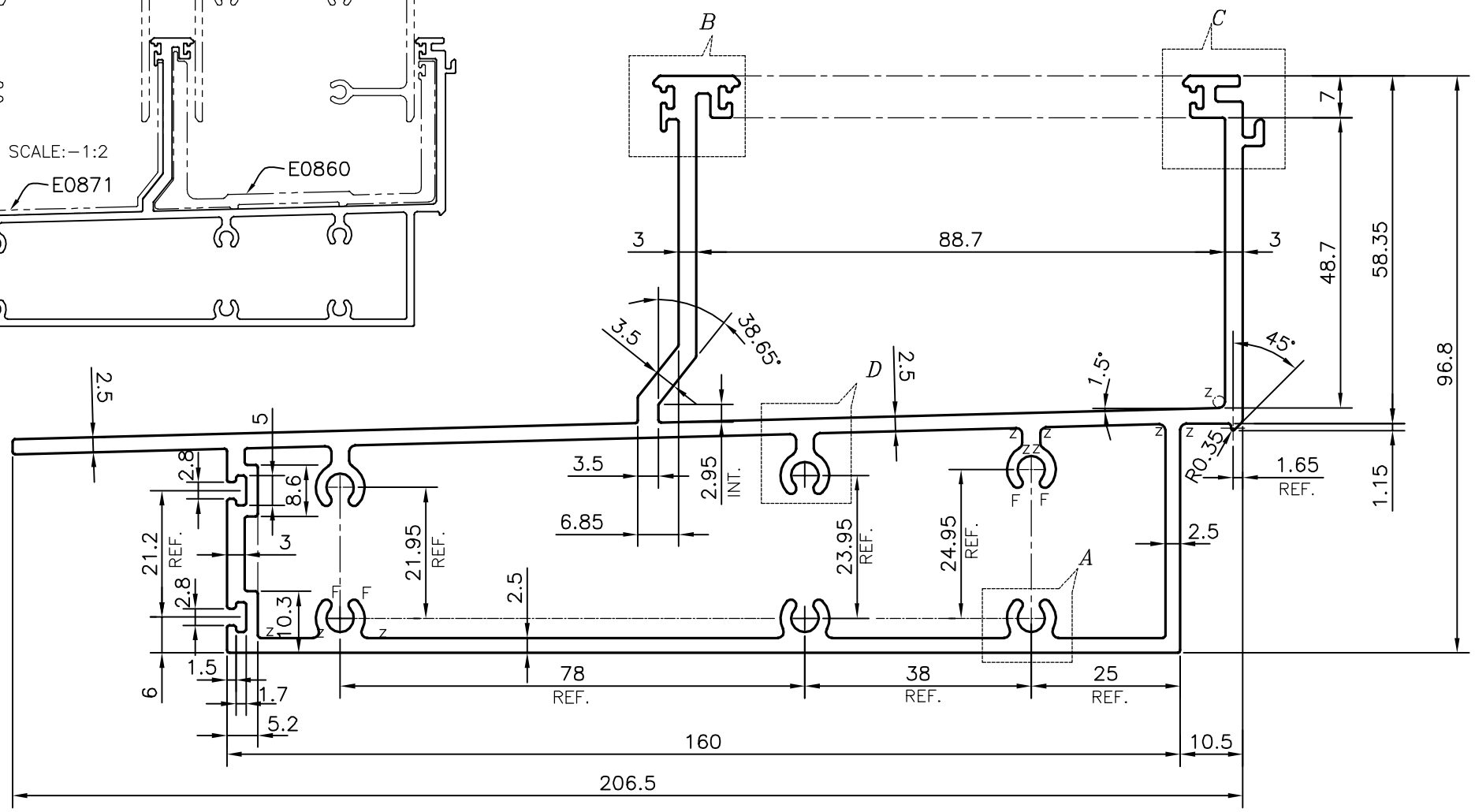

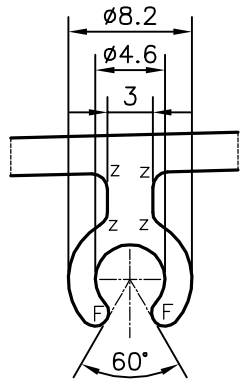

DETAIL OF "D"
SCALE 2:1

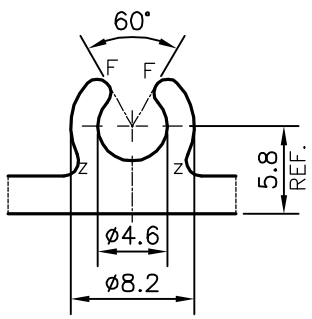

DETAIL OF "A"
SCALE 2:1

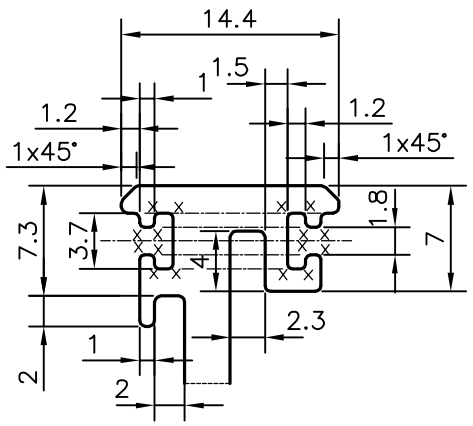

DETAIL OF "B"
SCALE 2:1

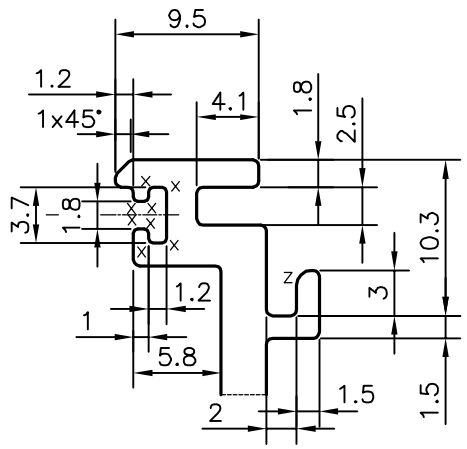

DETAIL OF "C"
SCALE 2:1

F = FULL RADIUS (8 PLACES)
Z = RADIUS 1 mm. (16 PLACES)
X = RADIUS 0.3 mm. (24 PLACES)

TOLERANCES ON OVERALL WIDTHS & WIDTHS ACROSS FLATS OF BARS, & REGULAR SECTIONS			
UPTO 6.40mm – ±0.20	UPTO 32.0mm – ±0.38	UPTO 120.0mm – ±0.85	1. STRAIGHTNESS=1.0mm/M
UPTO 10.0mm – ±0.23	UPTO 50.0mm – ±0.46	UPTO 160.0mm – ±1.02	2. TWIST=1.0mm/M
UPTO 12.0mm – ±0.25	UPTO 60.0mm – ±0.53	UPTO 200.0mm – ±1.14	3. ANGULARITY= ±1°
UPTO 16.0mm – ±0.28	UPTO 80.0mm – ±0.69	UPTO 250.0mm – ±1.40	4. FLATNESS =0.007xWIDTH
UPTO 25.0mm – ±0.30	UPTO 100.0mm – ±0.75	UPTO 300.0mm – ±1.65	

JINDAL
SYMBOL OF QUALITY
AN ISO 9001 COMPANY

JINDAL ALUMINIUM LTD.

BANGALORE–560073 (INDIA)

1. ALL DIMENSIONS ARE IN mm.
2. ROUND OFF ALL SHARP CORNERS WITH 0.40 mm.
3. TOLERANCES WILL BE AS PER IS:6477–1983 , UNLESS OTHERWISE SPECIFIED

		NAME	DATE
DRAWN		J.P.KAUSHIK	11–07–2018
CHECKED			
APPROVED		B.NATARAJA	14–07–2018
SCALE			1:1
AREA mm²			1753.802
PERIMETER mm.			825.426
WEIGHT kg/m			4.735

PARTY'S NAME	ALUFIT (INDIA) PRIVATE LIMITED, BANGALORE
PARTY'S DRAWING No.	WTC–DIE–05
ALLOY & TEMPER	6063 T6
DESCRIPTION	CURTAIN WALL SECTION–HEAD TRANSOM

DRAWING No.	SECTION No.
P–18392–1	–
E0872	E0872