P–18423–1
E0893

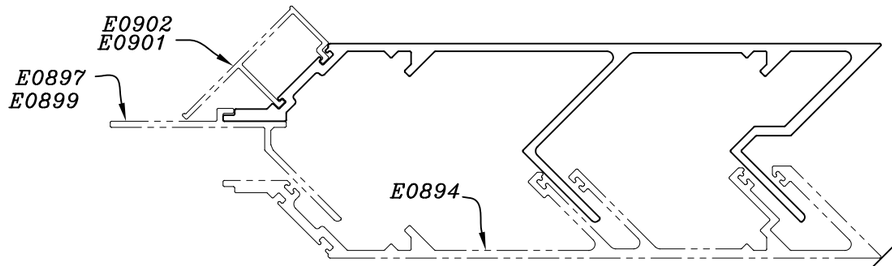

SCALE:– 1:2

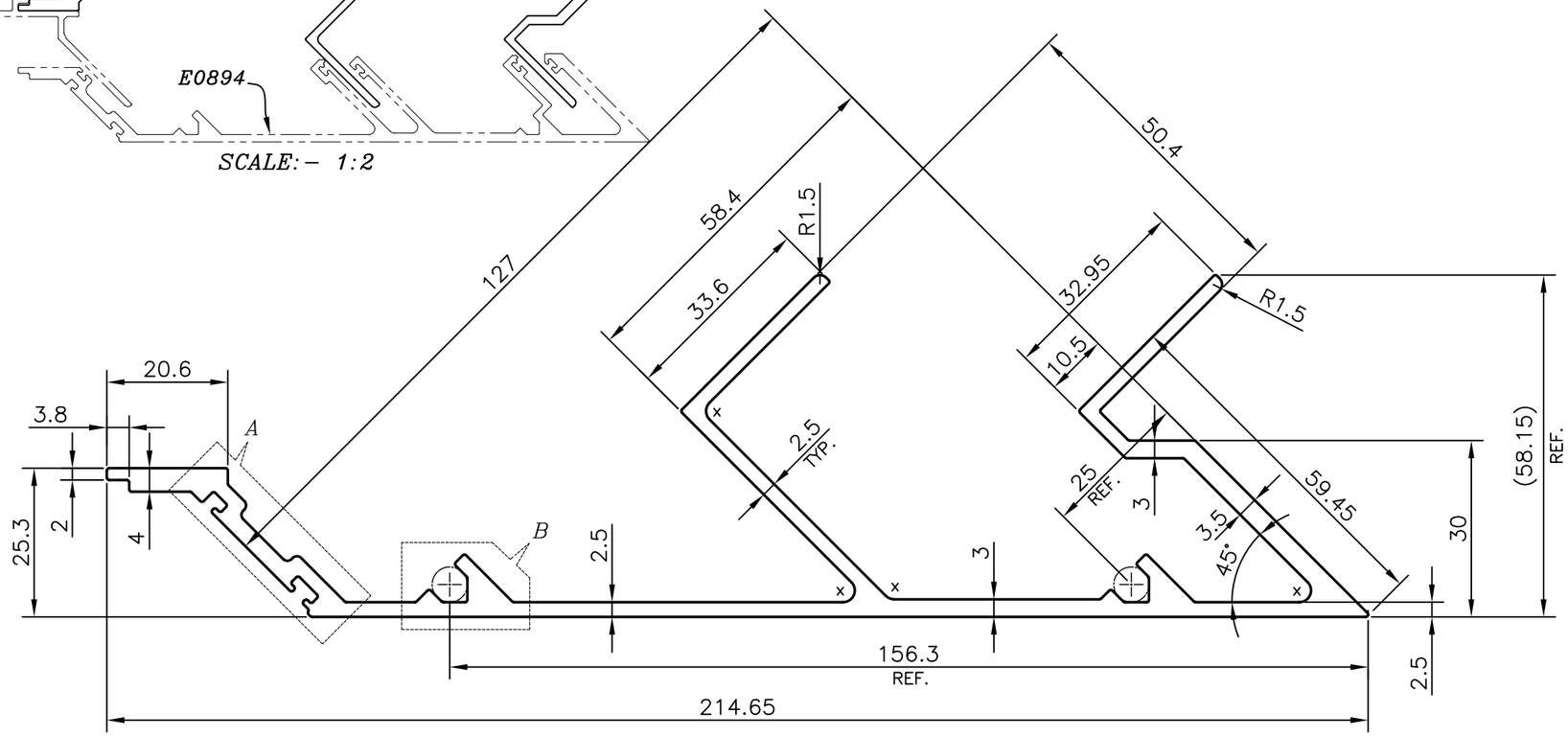

X = RADIUS 2 mm. (4 PLACES)
Z = RADIUS 1 mm. (4 PLACES)

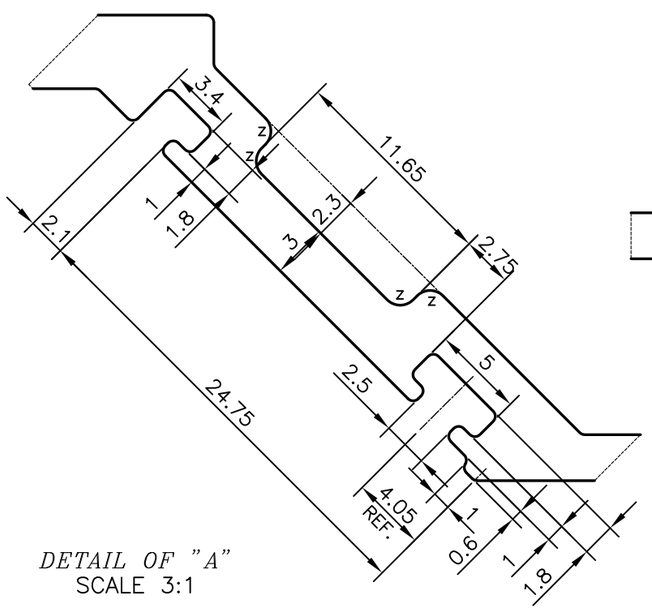

DETAIL OF "A"
SCALE 3:1

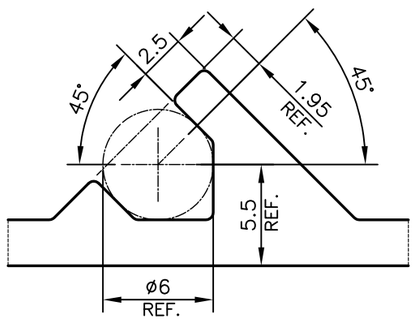

DETAIL OF "B"
SCALE 3:1

TOLERANCES ON OVERALL WIDTHS & WIDTHS ACROSS FLATS OF BARS, & REGULAR SECTIONS			
UPTO 6.40mm – ±0.20	UPTO 32.0mm – ±0.38	UPTO 120.0mm – ±0.85	1. STRAIGHTNESS=1.0mm/M
UPTO 10.0mm – ±0.23	UPTO 50.0mm – ±0.46	UPTO 160.0mm – ±1.02	2. TWIST=1.0mm/M
UPTO 12.0mm – ±0.25	UPTO 60.0mm – ±0.53	UPTO 200.0mm – ±1.14	3. ANGULARITY= ±1°
UPTO 16.0mm – ±0.28	UPTO 80.0mm – ±0.69	UPTO 250.0mm – ±1.40	4. FLATNESS =0.007xWIDTH
UPTO 25.0mm – ±0.30	UPTO 100.0mm – ±0.75	UPTO 300.0mm – ±1.65	

JINDAL
SYMBOL OF QUALITY
AN ISO 9001 COMPANY

JINDAL ALUMINIUM LTD.
BANGALORE–560073 (INDIA)

1. ALL DIMENSIONS ARE IN mm.
2. ROUND OFF ALL SHARP CORNERS WITH 0.40 mm.
3. TOLERANCES WILL BE AS PER IS:3965–1981 , UNLESS OTHERWISE SPECIFIED

	NAME	DATE
DRAWN	PARVESH	12–07–2018
CHECKED		
APPROVED	B.NATARAJA	17–07–2018
SCALE		1:1
AREA mm^2		1185.812
PERIMETER mm.		819.477
WEIGHT kg/m		3.202

PARTY'S NAME	ALUFIT INDIA PVT. LTD., BANGALORE
PARTY'S DRAWING No.	AS PER AUTOCAD DRAWING–AL–OR2–07
ALLOY & TEMPER	6063 T6
DESCRIPTION	CURTAIN WALL SECTION–EXTERNAL CORNER MALE MULLION

DRAWING No.	SECTION No.
P–18423–1	–
E0893	E0893