P−18425−1
E0895

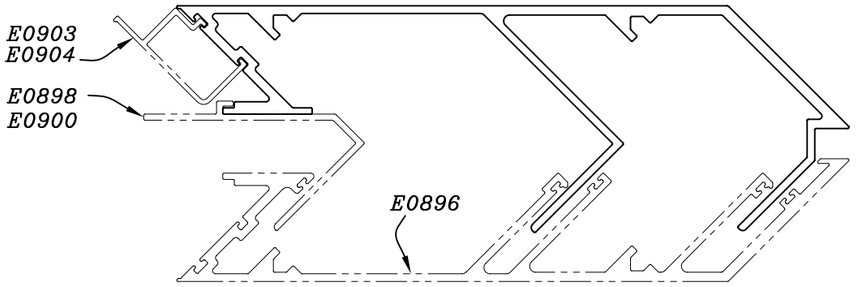

SCALE:− 1:2

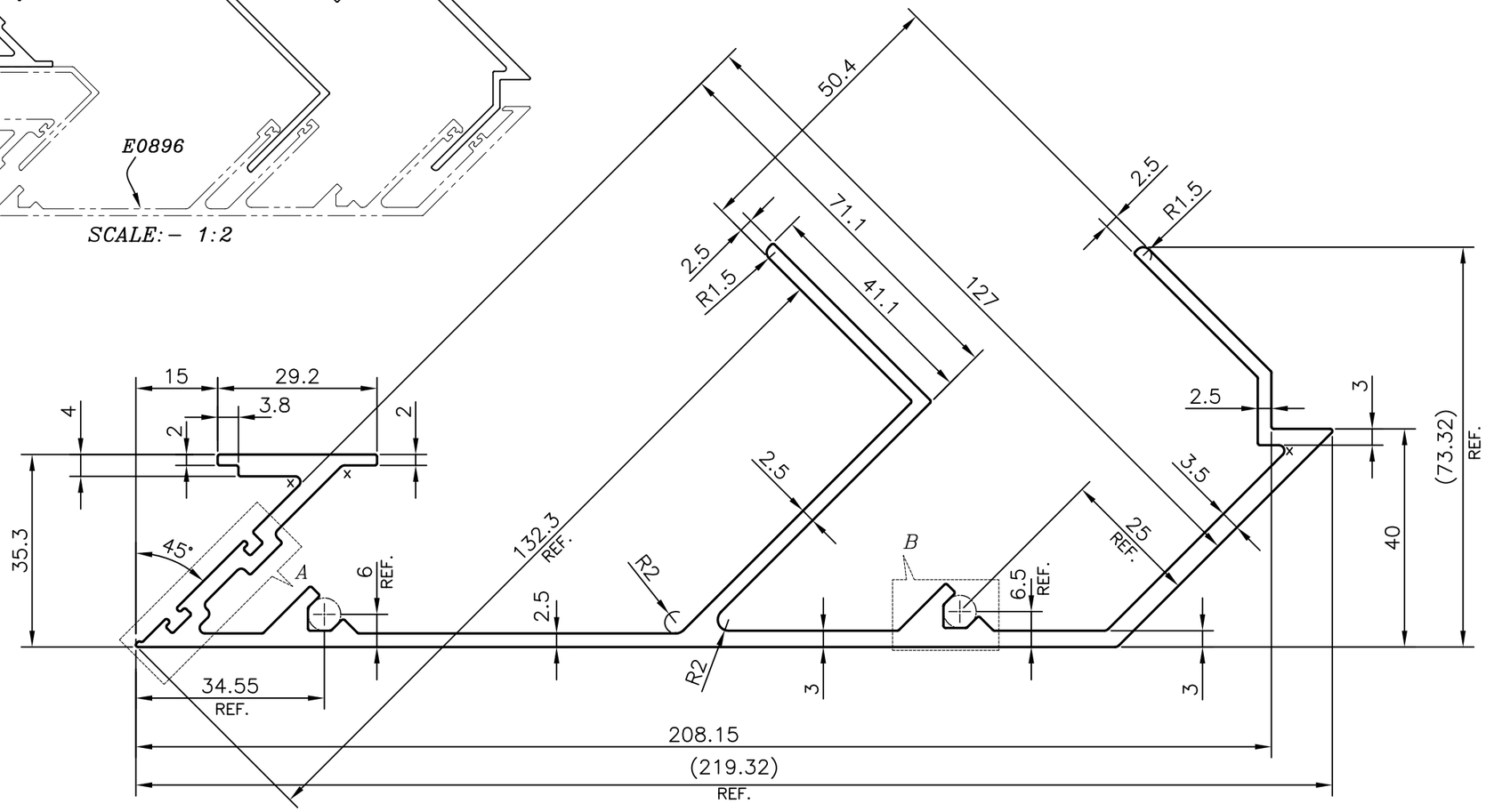

X = RADIUS 1 mm. (8 PLACES)

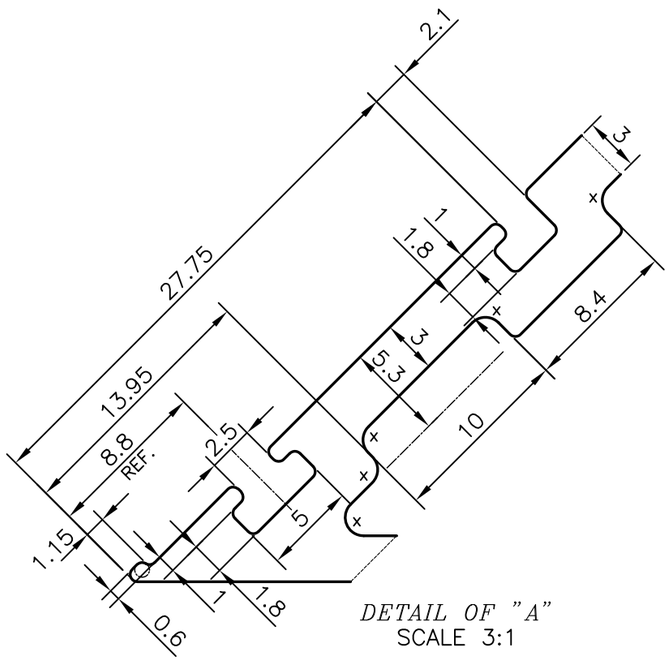

DETAIL OF "A"
SCALE 3:1

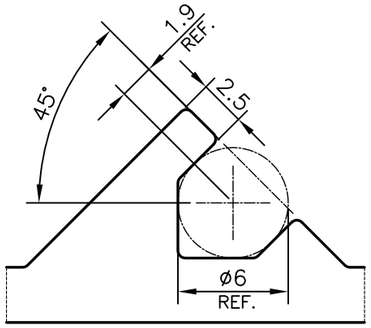

DETAIL OF "B"
SCALE 3:1

TOLERANCES ON OVERALL WIDTHS & WIDTHS ACROSS FLATS OF BARS, & REGULAR SECTIONS			
UPTO 6.40mm − ±0.20 UPTO 10.0mm − ±0.23 UPTO 12.0mm − ±0.25 UPTO 16.0mm − ±0.28 UPTO 25.0mm − ±0.30	UPTO 32.0mm − ±0.38 UPTO 50.0mm − ±0.46 UPTO 60.0mm − ±0.53 UPTO 80.0mm − ±0.69 UPTO 100.0mm − ±0.75	UPTO 120.0mm − ±0.85 UPTO 160.0mm − ±1.02 UPTO 200.0mm − ±1.14 UPTO 250.0mm − ±1.40 UPTO 300.0mm − ±1.65	1. STRAIGHTNESS=1.0mm/M 2. TWIST=1.0mm/M 3. ANGULARITY= ±1° 4. FLATNESS =0.007xWIDTH

JINDAL
SYMBOL OF QUALITY
AN ISO 9001 COMPANY

JINDAL ALUMINIUM LTD.
BANGALORE−560073 (INDIA)

1. ALL DIMENSIONS ARE IN mm.
2. ROUND OFF ALL SHARP CORNERS WITH 0.40 mm.
3. TOLERANCES WILL BE AS PER IS:3965−1981 , UNLESS OTHERWISE SPECIFIED

	NAME	DATE
DRAWN	PARVESH	12−07−2018
CHECKED		
APPROVED	B.NATARAJA	17−07−2018
SCALE		1:1
AREA mm^2		1387.225
PERIMETER mm.		937.625
WEIGHT kg/m		3.746

PARTY'S NAME	ALUFIT INDIA PVT. LTD., BANGALORE
PARTY'S DRAWING No.	AS PER AUTOCAD DRAWING−AL−OR2−09
ALLOY & TEMPER	6063 T6
DESCRIPTION	CURTAIN WALL SECTION−INTERNAL CORNER MALE MULLION

DRAWING No.	SECTION No.
P−18425−1	−
E0895	E0895