P-18594

E0940

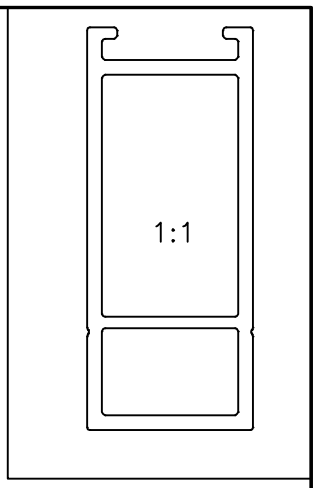

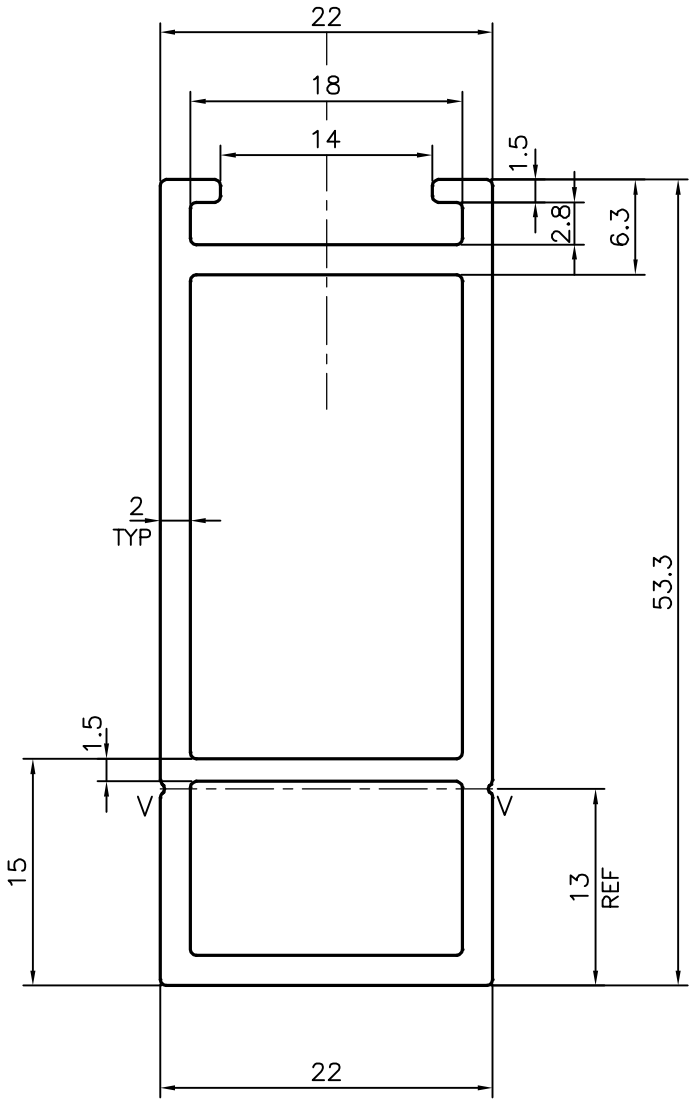

V = V GROOVE 0.3x90° (2 PLACES)

TOLERANCES ON OVERALL DIMENSIONS OF HOLLOW SECTIONS

UPTO 20.0mm – ±0.30	UPTO 80.0mm – ±0.70	UPTO 180.0mm – ±1.27	1. STRAIGHTNESS=1.7mm/M
UPTO 30.0mm – ±0.38	UPTO 100.0mm – ±0.80	UPTO 200.0mm – ±1.40	2. TWIST=1.7mm/M
UPTO 40.0mm – ±0.45	UPTO 120.0mm – ±0.90	UPTO 225.0mm – ±1.52	3. ANGULARITY= ±2°
UPTO 50.0mm – ±0.52	UPTO 140.0mm – ±1.00		4. FLATNESS =0.006xWIDTH
UPTO 60.0mm – ±0.60	UPTO 160.0mm – ±1.14		

JINDAL

SYMBOL OF QUALITY
AN ISO 9001 COMPANY

JINDAL ALUMINIUM LTD.

BANGALORE-560073 (INDIA)

	NAME	DATE
DRAWN	J.P.KAUSHIK	24-08-2018
CHECKED		
APPROVED	B.NATARAJA	01-09-2018

1. ALL DIMENSIONS ARE IN mm.
2. ROUND OFF ALL SHARP CORNERS WITH 0.40 mm.
3. TOLERANCES WILL BE AS PER IS:6477-1983 UNLESS OTHERWISE SPECIFIED

SCALE	2:1
AREA mm^2	318.002
PERIMETER mm.	165.516
WEIGHT kg/m	0.859

PARTY'S NAME	ALUFIT (INDIA) PVT. LTD., BANGALORE
PARTY'S DRAWING No.	PROFILE-T2-05
ALLOY & TEMPER	6063 T6
DESCRIPTION	MID TRANSOM-CEILING

DRAWING No.	SECTION No.
P-18594	–
E0940	E0940